Chapter 11: Interim Controls

THE BASIC STEPS COMMON TO MOST JOBS – HOW TO DO IT 11–5

I. INTRODUCTION 11–7
- A. When Interim Controls Are Appropriate and When They Are Not 11–8
- B. The Standard Treatments Option 11–8
- C. Combinations of Interim Controls and Abatement of Certain Hazards 11–10
- D. Preventive Measures That Can Be Performed by Residents 11–10

II. Basic Practices and Standards Applicable to Interim Control Jobs 11–10
- A. Preparing a Lead Hazard Control Plan for Multi-family Housing 11–10
- B. Qualifications of Persons and Firms Performing Interim Controls 11–12
- C. Small Amounts of Paint Disturbance 11–13
- D. Lead-Safe Work Practices 11–14
- E. Pre-Renovation Education 11–16
- F. Resident Protection and Worksite Preparation During Control Activities 11–17
- G. Worker Protection 11–18
- H. Waste Handling 11–18
- I. Cleanup 11–18
- J. Clearance 11–18
- K. Notification to Occupants of the Results of Hazard Evaluation and Control 11–19
- L. Ongoing Lead-Safe Maintenance 11–20
- M. Reevaluation 11–20
- N. Documentation 11–20

III. Paint Stabilization 11–22

How To Do It 11–22
- A. Typical Lead Containing Coatings and Their Failures 11–23
  1. Moisture 11–23
  2. Aging 11–23
  3. Mechanical Damage 11–23
  4. Chemical Incompatibility 11–25
  5. Poor Surface Preparation 11–25
- B. Substrate Condition and Repairs 11–25
  1. Building Envelope Leaks 11–25
  2. Interior Repairs and Water 11–26
  3. Water Vapor Management 11–27
  4. Substrate Repairs 11–27
- C. General Paint Application Guidelines 11–28
  1. Appropriate Conditions 11–28
  2. When Paint Stabilization Will Not Last Very Long 11–28

3. General Recommendations for Applying Paint 11–28
D. Worksite Preparation 11–29
E. Surface Preparation 11–29
1. Paint Removal Practices 11–30
2. Cleaning Surfaces of Dust and Chips. 11–31
F. Priming 11–31
1. Oil- and Alkyd-Based Primers 11–31
2. Waterborne Primers 11–32
G. Top-coats 11–32
H. Cleaning and Clearance or Cleaning Verification 11–33
I. Maintenance 11–33

IV. Treatment of Friction, Impact, and Chewable Surfaces 11–34

How To Do It 11–34
A. Definition of Terms 11–35
1. Friction Surfaces 11–35
2. Impact Surfaces 11–36
3. Chewable Surfaces 11–36
B. Lead Hazard Control Measures 11–37
1. Window Systems 11–37
2. Door Systems 11–40
3. Stair Systems 11–41
4. Chewable Surfaces 11–41
5. Baseboards and Outside Wall Corners 11–42
6. Drawers and Cabinets 11–43
7. Porches, Decks, and Interior Floors 11–43

V. Dust Removal and Control 11–44

How To Do It 11–44
A. Introduction 11–45
1. Sources and Locations of Leaded Dust 11–46
2. Removing Leaded Dust From a Dwelling 11–47
3. Creating Cleanable Surfaces and Determining Whether Dust Removal Alone Is Adequate 11–48
4. Planning and Preparations 11–49
5. Responsibilities of Owners 11–50
6. Responsibilities of Contractors 11–50
B. Methods of Dust Removal 11–51
1. Cleaning Hard Surfaces 11–51
2. Removal or Cleaning of Carpets 11–54
3. Cleaning Upholstered Furniture 11–58

4. Forced Air Systems and Drop Ceilings 11–58
5. Resident Protection 11–60
C. Follow-up to Dust Removal 11–60

VI. Soil Interim Controls 11–61

How To Do It 11–61
A. Definition of Soil Lead Hazards 11–62
B. Temporary and Permanent Soil Treatments 11–62
C. Types of Interim Control Measures for Soil 11–62
1. Soil Alteration 11–63
2. Soil Surface Cover 11–63
3. Raised Beds and Other Landscaping Options 11–64
4. Land Use Controls 11–65
5. Reduction of Soil Tracking into Dwellings 11–67
6. Drainage and Dust Controls 11–67
D. Making a Plan 11–67
E. Guidance on Specifications for Interim Controls of Soil Lead Hazards 11–68
F. Monitoring and Maintaining Soil Interim Controls 11–68

REFERENCES 11–69

FIGURES

Figure 11.1 Moisture-Related Causes of Paint Failure 11–24
Figure 11.2 HEPA Vacuum Sanders 11–30
Figure 11.3 Window before and after friction treatment 11–35
Figure 11.4 Examples of impact and chewable surfaces 11–36
Figure 11.5 Prepare the worksite and pre-clean the window 11–37
Figure 11.6 Remove parting bead. 11–37
Figure 11.7 Remove the bottom sash, sash weights and stops 11–38
Figure 11.8 Remove sash controls/weights 11–38
Figure 11.9 Window after removal of sash weights 11–38
Figure 11.10 Rebuild damaged sash with filler or putty 11–38
Figure 11.11 Wet plane edges of sash to fit new jamb liners 11–38
Figure 11.12 Vacuum window again 11–38
Figure 11.13 Fit sashes into jamb liners 11–39
Figure 11.14 Reinstall sash into jamb 11–39
Figure 11.15 Stabilizing paint on doors: Wet planning and wet sanding 11–40
Figure 11.16 Before and after stair treatments 11–41
Figure 11.17 Covering Stairs with Tread Guards 11–42

Figure 11.18 Shoe Molding Is an Acceptable Impact Surface Treatment for Baseboards... 11–42
Figure 11.19 Corner Bead Coverings Can Be Used on Outside Corners of Walls..... 11–42
Figure 11.20 Turning a Window Sill and Trough Into a Smooth and Cleanable Surface..... 11–48
Figure 11.21 How to Use a HEPA Vacuum 11–52
Figure 11.22 Changing HEPA vacuum filter 11–54
Figure 11.23 Carpet with debris and after cleaning..... 11–58
Figure 11.24 Air vent before and after cleaning 11–59
Figure 11.25 Clean Air Vent Registers..... 11–59
Figure 11.26 Walk-Off Mats..... 11–60
Figure 11.27 Thorny Bushes as a Land Use Control 11–65
Figure 11.28 Using Fencing as an Interim Control 11–65

TABLES

Table 11.1 Finish Coats for Paint Stabilization 11–32
Table 11.2 Sticky Tape Technique for Removing Loose Paint on Impact Surfaces for Owner/ Occupants or Residents 11–43
Table 11.3 Potential Sources of Lead-Containing House Dust 11–46
Table 11.4 Major Dust Reservoirs and Potential Dust Traps 11–47
Table 11.5 Rug Cleaning Steps and Approximate Time Per 10 Square Feet 11–57
Table 11.6 Grasses and Their Appropriate Applications 11–66

Chapter 11: Interim Controls

The Basic Steps Common to Most Jobs – How to Do It

1. **Decide on hazard control methods to be used and prepare specifications.** For building components, determine which lead-based paint hazards reported by a risk assessor or presumed to be present will be addressed with interim controls (dust removal, paint stabilization, and/or control of friction/abrasion points) and which will be permanently abated (component replacement, paint removal, enclosure, or encapsulation). (Note that, if renovation or rehabilitation is the intention of the work, some or all of the component replacement may not be abatement, but may be conducted as an interim control. See Appendix 6, regarding the applicable regulations.) For soil lead hazards, decide which interim control or abatement measure is appropriate for the climate, the planned use of the area, and how frequently children under age 6 will use the area. The amount of detail provided in specifications should be commensurate with the size of the job. The specifications should state how any abatement activities and other construction work (e.g., weatherization) will relate to the interim control work. It may be efficient to combine contracts or work orders for interim controls and those for abatement activities in many cases.

2. **Prepare a lead hazard control plan, especially for multi-family housing.** For a multi-family property in which work must be done in more than 10 dwelling units, the owner, together with a certified risk assessor, planner, or other designer, should develop a site-specific lead hazard control plan. The owner of a smaller property may wish to have a lead hazard control plan developed for that property, as well. The plan should be based on the lead-based paint hazards identified, the feasibility of the control measures, occupancy by young children, and financing. (See Section II.A of this chapter.)

3. **Determine that the contractor and supervisor are certified to do the work in a lead-safe manner.** Select a contractor that is certified as a renovation firm by the U.S. Environmental Protection Agency (EPA) or the State or Tribe to do renovation work in target housing in the State or Tribal area where the property is located. A property owner or manager using staff to conduct the work must obtain certification as a renovation firm, and ensure that the project obtains certification as a renovator. Workers must be trained and properly supervised to assure that lead-safe work practices are followed on the job. (See Section II.B.) Note that the requirement to use a certified renovation firm and certified renovator do not apply if the work in target housing is minor repair and maintenance work, as defined by EPA; if the work is in HUD-assisted target housing, the requirement does not apply if the work is at or below HUD's *de minimis* threshold (see Section II.C, below).

4. **Provide pre-renovation education to occupants.** EPA requires contractors to notify residents of the affected dwelling(s) of the work, describing its scope, locations when it is expected to begin and end, and provide residents with the "Renovate Right" pamphlet no more than 60 days before work begins. If the scope, locations or schedule change, provide notification of the change before work beyond that originally described is begun. (See Section II.E, and Appendix 6 for more detail.) Determine if State, Tribal and/or local pre-renovation education requirements apply. (Make a similar determination for other items discussed throughout this Chapter.)

5. **Prepare the worksite and protect the occupants.** Determine the appropriate worksite preparation and occupant protection measures for the job, based on guidance in Chapter 8. Inform the residents and install the barriers and containment.

6. **Perform the work.** Perform the work as planned, in accordance with guidance in Sections III, IV, V, and VI.

7. **Handle and dispose of waste correctly.** Wrap or bag all solid waste tightly, store it in a secure area, and dispose of it properly. Liquid waste can usually be disposed of in a sanitary sewer system, but not a storm sewer. Comply with state and local requirements. (See Chapter 10 for further guidance.)

8. **Conduct daily cleanups.** Clean up the work area and pathways used by workers at the end of each work day (or work shift, if work is being done in multiple shifts). (See Chapter 14, sections IV.B and C.)

9. **Conduct final cleanup.** The final cleanup should be started no sooner than 1 hour after completion of the work, to allow time for lead particles to settle. If the area to be cleared may have had high lead levels before the work and/or has rough horizontal surfaces that may make clearance difficult, consider using a pre-clearance screen to be sure the space is ready for clearance or cleaning verification. If the project fails the pre-clearance screen, conduct another final cleanup and pre-clearance screen. If the project fails the second pre-clearance screen, either: (1) complete interim controls and/or re-clean; or (2) conduct the clearance examination or cleaning verification. (For further guidance on cleanup, see Section II.I of this chapter and Chapter 14.)

10. **Clearance.** Have an independent, certified risk assessor, lead-based paint inspector, or sampling technician conduct a clearance examination no sooner than 1 hour after final cleanup to let dust settle (see Chapter 15). If clearance is not achieved, complete interim controls and/or re-clean. Following a successful clearance examination, the property owner should receive documentation to that effect.

    - Note that the EPA allows certain work areas in housing not covered by HUD's Lead Safe Housing Rule (24 CFR 35, subparts B–R) to be reoccupied after a visual inspection for residual dust, debris and residue, and a "cleaning verification," which is a visual comparison of wet disposable cleaning cloths that have been wiped over windowsills, uncarpeted floors, or countertops with a reference cleaning verification card, as a means of determining whether post-renovation cleaning has been properly completed. (See Appendix 6 for more detail.)

    - Note that the EPA's cleaning verification requirement does not apply if the work in target housing is minor repair and maintenance work; if the work is in federally-assisted target housing, HUD's clearance requirement does not apply if the work is at or below HUD's *de minimis* threshold (see Section II.C, below).

11. **Notification of residents.** The property owner or manager should notify residents of what lead-based paint hazards were controlled and how, and the results of the clearance examination. While residents do not have to be notified for interim control or other renovation work in target housing that is not federally-assisted – only the contractor's client has to be informed of the results of the cleaning verification and other results of the work – HUD recommends that the residents be notified whether or not the housing is assisted.

12. **Perform ongoing lead-safe maintenance.** The owner should conduct ongoing maintenance and monitoring of interim controls to ensure that they remain in place. (See Chapter 6 for detailed guidance on lead-safe maintenance.) If reevaluation is required by regulation or the hazard control plan for the property, reevaluations by a certified risk assessor should be completed at two-year intervals. (See Section II.M of this chapter and Section VII of Chapter 5.)

13. **Document the work and retain records.** The owner should assure that the work and the clearance examination (or cleaning verification) have been documented, and should maintain records of all lead hazard control, clearance, reevaluation, maintenance and monitoring activities. (See Appendix 6 for record retention requirements.) The owner must turn over all lead-related records the owner has to any new owner before sale of the property as part lead disclosure. (See Section II.N for a list of documents.) The owner must also make disclosure of lead-related documents to tenants before they become obligated under new leases or revised leases (see Appendix 6).

I. Introduction

Interim controls are intended to make dwellings lead-safe by temporarily controlling lead-based paint hazards. Abatement is intended to permanently control lead-based paint hazards. See Chapter 12 for a detailed discussion of the difference between abatement and interim controls. In Title X of the Housing and Community Development Act of 1992, interim controls are defined as

> "... a set of measures designed to reduce temporarily human exposure or likely exposure to lead-based paint hazards, including specialized cleaning, repairs, maintenance, painting, temporary containment, ongoing monitoring of lead-based paint hazards or potential hazards and the establishment and operation of management and resident education programs."

Interim control measures are fully effective only as long as they are carefully monitored, maintained, and, in some cases, professionally reevaluated. If interim controls are properly maintained, they can be effective indefinitely. As long as surfaces are covered with lead-based paint, however, they constitute potential hazards.

Interim lead hazard control measures include:

- Repairing all rotted or defective substrates that lead to rapid paint deterioration. (Note that repairing defective building systems that are causing substrate damage may be a prerequisite for effective interim control but is outside the scope of interim control per se).
- Stabilizing all deteriorated lead-based paint surfaces. Paint stabilization entails removing deteriorating paint, preparing the substrate for repainting, and repainting (see Section III).
- Making floors and interior window sills and window troughs smooth and cleanable.
- Eliminating friction surfaces with lead-based paint on windows, doors, stair treads, and floors, when they are generating dust lead hazards (see Section IV).
- Repairing doors and other building components causing impact damage on painted surfaces, if the paint is lead-based paint (see Section IV).
- Treating protruding, chewable surfaces, such as interior window sills, where lead-based paint may be present and there is either visual or reported evidence that children are mouthing or chewing them (see Section IV).
- Dust removal and control – i.e., cleaning surfaces to reduce levels of dust containing lead to acceptable levels, including cleaning carpets, if they are contaminated (see Section V).
- Covering (with planting, mulch, gravel, or other means) or eliminating access to all bare soil containing excessive levels of lead (see Section VI).

Activities that are required by HUD or EPA are identified in this chapter as being "required" or as actions that "must" be done. Activities that are not required by HUD but are recommended by these *Guidelines* are identified as being "recommended" or as actions that "should" be done. Activities that may be done at the discretion of the owner or manager are identified as "optional."

A. When Interim Controls Are Appropriate and When They Are Not

It is easiest and most appropriate to use interim controls when substrates are structurally sound and lead exposure comes primarily from deteriorating paint and excessive levels of lead in household dust and/or soil. Interim controls are also appropriate if the housing unit is slated for demolition or renovation within a few years and the investment in more costly abatement is not merited. In many cases resources will not be available to finance abatement, making interim controls the only feasible approach. (Abatement measures are either literally permanent, in the case of component removal, or are considered by Title X as being permanent because they last for at least 20 years, in the case of enclosure or encapsulation. These latter measures are "permanent" if they are maintained by establishing and implementing an ongoing lead-safe maintenance plan for at least 20 years, and, in the case of encapsulants, the products have a 20-year or longer warranty subject to the implementation of the maintenance plan. Enclosure or encapsulation without such an expected longevity and maintenance plan may be conducted as interim control measures.)

Interim controls are unlikely to be effective if the building has substantial structural defects or if interior or exterior walls, or major components, such as windows and porches, are seriously deteriorated or subject to excessive moisture. Paint cannot be effectively stabilized unless substrates are dry, structurally sound, and waterproof. Other interim control measures, such as window repair, will also not be very effective if structural problems are likely to result in rapid treatment failure. Any structural problems should be repaired before interim controls are implemented. If these problems cannot be repaired, more frequent monitoring will be necessary to identify possible early failures and more frequent hazard controls will probably be needed.

Abatement may be required by federal, state, or local regulations in certain situations; in such situations, interim controls are precluded. For example, HUD requires that public housing authorities abate all lead-based paint in dwelling units undergoing comprehensive modernization. HUD regulations also require that all lead-based paint hazards on a property be abated in the course of rehabilitation projects that use more than $25,000 of Federal rehabilitation funds per dwelling unit (24 CFR Part 35, Subpart J; see also HUD's Interpretive Guidance on its Lead Safe Housing Rule, particularly items J3 and J3a, at its ***http://portal.hud.gov/hudportal/documents/huddoc?id=DOC_25476.pdf***). Some State and local governments have enacted laws and regulations requiring that certain lead-based paint hazards be abated.

Energy-efficient products (such as energy-efficient doors and windows) should be considered whenever building components are replaced. A source of information on energy efficient products is ***www.energystar.gov*** (click on the "Find ENERGY STAR Products" or similar hotlink).

B. The Standard Treatments Option

Before controlling lead-based paint hazards, it is necessary to know where they are. This means that a risk assessment (as described in Chapter 5) must be conducted first. However, unless prohibited by State or local law, a property owner may elect to bypass the risk assessment and proceed directly to a set of maintenance and repair activities that will eliminate, at least temporarily, any lead-based paint hazard that might be present. This option is called "standard treatments." HUD regulations permit standard treatments as an option where interim controls are required in pre-1978 housing receiving Federal assistance, and pre-1978 housing being sold by the Federal government (24 CFR 35.120(a)).

Standard treatments consist of the following activities:

- Paint stabilization. All deteriorated paint on exterior and interior surfaces should be stabilized, following guidance in Section III of this chapter.
- Making surfaces smooth and cleanable. All horizontal surfaces, such as floors, stairs, interior window sills and window troughs, that are rough, pitted or porous, should be made smooth and easily cleanable. Minor surface damage may be correctable by spackling and recoating. Otherwise it may be necessary to cover or coat the surface with a material such as metal coil stock, plastic, polyurethane, sheet vinyl, or linoleum.
- Correcting dust-generating conditions. Conditions causing friction or impact on painted surfaces should be corrected, following guidance in Section IV of this chapter.
- Treating bare soil. Bare soil should be treated in accordance with guidance in Section VI of this chapter.
- Safe work practices and worker qualifications. All standard treatments should incorporate safe work practices as described in Section II.D of this chapter. Persons performing standard treatments should have the same training and/or supervision as those performing interim controls, as described in Section II.B.
- Clearance. A clearance examination should be performed in accordance with Chapter 15 after finishing standard treatments that are larger than HUD's *de minimis* threshold before they are concluded. In housing not receiving federal assistance, EPA requires interim control projects larger than its minor repair and maintenance threshold to have a "cleaning verification" step before they are concluded.
- Other recommended practices. All other recommended practices applicable to interim controls, as described in Section II, also apply to standard treatments. Also, although HUD regulations do not require treatment of chewable surfaces under the standard treatments option, these *Guidelines* recommend that owners or managers consider covering any protruding painted surfaces with teeth marks if young children under age 6 reside in the unit or frequent the common area. (See Section IV.)

In planning and carrying out standard treatments, owners and contractors should presume that all paint is lead-based paint and all bare soil contains soil lead hazards, unless a certified risk assessor or lead-based paint inspector has determined otherwise. The disadvantage of standard treatments is that unnecessary lead hazard control work may be done. The possible advantage is that the owner may save money by foregoing a risk assessment and can simplify the work of the property manager and the maintenance crew by training and tasking a crew to efficiently perform a routine set of work activities that will be lead-safe whether or not lead-based paint is actually present. Standard treatment options may be appropriate for a well-maintained multi-family property with its own appropriately trained maintenance staff.

When there is a substantial likelihood that some treatable surfaces do not contain lead-based paint, owners who hire risk assessors will usually save money overall because the risk assessment will focus the owners' efforts on confirmed hazards, and avoid unnecessary lead hazard control costs for work on building components that are not coated with lead-based paint.

Some state and local laws prescribe certain treatments in order for the housing unit to qualify as lead-safe. Insurance companies and lenders may also prescribe certain treatments if a property is to qualify for insurance coverage or a loan. In all cases, the property owner should ensure that, at a minimum, the required lead hazard control measures are carried out.

C. Combinations of Interim Controls and Abatement of Certain Hazards

In many dwellings, owners will choose a combination of interim controls *and* abatement. This decision is best made in consultation with a certified risk assessor. For example, it is possible to stabilize deteriorated lead-based paint and remove excess levels of leaded dust (interim controls), and at the same time enclose some lead-based painted surfaces, replace some lead-based painted components, or remove lead-based paint from some surfaces (abatement). Such combinations of interim control and abatement treatments will often be the most cost-effective response to a property owner's lead hazard problem, particularly if carried out when the dwelling unit is vacant.

D. Preventive Measures That Can Be Performed by Residents

There are also a number of preventive measures to minimize the likelihood or severity of lead-based paint hazards that owner-occupants or residents of rental dwellings can carry out. Owners of rental properties should provide residents with educational materials furnished by State or local agencies or lead poisoning prevention organizations that include the following basic information:

- Children's toys should not be placed beneath windows or near surfaces subject to frequent friction or impact or near deteriorated paint surfaces.
- If there is a sudden loosening of paint material through friction, impact, or any other reason, occupants should use the sticky tape method to remove loose paint described in Table 11.2.
- Porch decks, interior floors, and other horizontal surfaces should be wet mopped at least twice a month.
- A door mat should be placed inside doors with direct access to the outdoors, and thoroughly vacuumed weekly.
- Instances of deteriorating paint should be reported to management as soon as they are discovered.

II. Basic Practices and Standards Applicable to Interim Control Jobs

This section describes the basic practices and standards that are common to most interim control activities. Later sections of the chapter describe work practices that are specific to particular types of jobs, such as paint stabilization, treatment of friction surfaces, dust removal, and soil lead hazard controls.

A. Preparing a Lead Hazard Control Plan for Multi-family Housing

Conducting interim controls of lead-based paint hazards in multi-family housing presents issues not generally found in single-family housing. In most occupied multi-family developments, it is not feasible, financially or logistically, to carry out hazard control activity in all dwelling units at once. In properties with a relatively small number of dwelling units, it may be possible to proceed unit by

unit and complete the hazard control work quickly. In larger properties, however, decisions must be made as to the order of work in dwelling units and common areas, and perhaps, in rooms or components within dwelling units and common areas. Even when an entire building is vacant and undergoing renovation, hazard control elements of the work must be identified and scheduled. Therefore, it is usually advisable that there be a lead hazard control plan for properties with more than 10 units.

Owners should have an independent certified risk assessor prepare a lead hazard control plan to address lead-based paint hazards identified by the risk assessment. If no risk assessment has been conducted, the specific hazards that are presumed to be present should be addressed by using standard treatments. The plan should prioritize and schedule control measures and any additional hazard evaluations so that available resources are targeted for maximum benefit. Lead hazard control planners or designers may also be helpful in preparing such a plan. In developing the plan, the risk assessor should consult with the property owner to gain insights about the property to determine which strategies will be most appropriate. The goal of this consultation is to combine in the plan the risk assessor's knowledge of lead-based paint hazards with the property owner/manager's knowledge of the particular property – its maintenance history, persistent problems, occupancy profile, capital improvement program, etc.

An owner of a building in good condition may find it more efficient to omit the risk assessment, presume all paint is lead-based paint, and proceed directly to standard treatments. Standard treatments can be performed on a routine basis, at the time of turnover of dwelling units, and during periodic maintenance of units, common areas, and grounds.

In developing a lead hazard control plan, it is reasonable to consider treating units occupied by children under age 6 or by women who have informed the property owner or manager that they are pregnant first. Common play areas, child care centers, or dwelling units serving as child care centers are also candidates for early treatment. It is reasonable to consider the fact that it is less expensive to conduct hazard controls effectively and safely in vacant units than in occupied units.

Thus, it may be appropriate to postpone some hazard control treatments until unit turnover. In order to more quickly and cost effectively reduce childhood exposure to lead in the environment, it is reasonable to consider the relocation of families with young children from housing units with lead-based paint (LBP) hazards to vacant units where any hazards have been controlled.

At a minimum, a lead hazard control plan should include the following elements:

- A hazard control schedule for all units. Usually units with young children or women who have informed the property owner or manager that they are pregnant should be treated first, followed by other units.
- A commitment on the part of the owner and manager to ongoing lead-safe monitoring and maintenance as explained in Chapter 6. This should include visual assessments by owner or staff, and control of lead-based paint hazards that are generated during routine maintenance work or normal building aging, what those controls consist of, and how those controls will be implemented.
- A description of how maintenance workers and other staff will be trained to handle lead-based paint hazards safely and perform lead-safe renovations.

- Specific measures that will be taken during unit turnover (often paint stabilization, specialized dust removal, the provision of cleanable surfaces on floors, sills, and troughs and some minor building component replacement).
- A description of who will perform clearance examinations – whether by a certified independent consultant (which is recommended in all situations), or by a designated certified in-house staff (if the work is done by an independent contractor) as allowed under the Lead Safe Housing Rule.
- A schedule for hazard control actions to be completed in common areas.
- A schedule for reevaluations by certified risk assessors, if recommended.
- Designation of an individual, preferably on the staff of the owner or the property manager, who is responsible for issues associated with lead-based paint hazards.

B. Qualifications of Persons and Firms Performing Interim Controls

Interim control activities frequently disturb lead-based paint (LBP) and take place in areas with excessive levels of dust that contains lead. EPA and OSHA have established regulations that cover these activities, as has HUD for these activities conducted in federally-assisted housing.

1. **EPA RRP Rule,** EPA's Renovation, Repair and Painting (RRP) rule covers renovation projects in assisted and unassisted target housing and child-occupied facilities, unless they are smaller than EPA's minor repair and maintenance threshold. The term "renovation" includes repair and painting; interim control projects are "renovations." The RRP Rule requires a firm performing renovation in target housing to be certified as a lead-safe renovation firm, and an individual certified as a lead-safe renovator to provide on-the-job training for workers used on the project, perform or direct workers to follow the RRP rule's work practice standards, be at the job or available when work is being done, and perform the post-renovation cleaning verification (40 CFR 745, subpart E).

   A renovation firm must be certified (licensed) by the State or Tribe where the testing is to be done if the State or tribe has an EPA-authorized renovation certification program. The State or Tribe may have qualification requirements for firms and persons performing interim controls that are different than those of the Federal Government. If the State does not have such a program, the renovation firm must be certified by EPA. The list of EPA-authorized States and tribes is at the EPA's RRP web page ***http://www.epa.gov/opptintr/lead/pubs/renovation.htm***; the agencies administering their programs are linked from that page. For other States and Tribal areas, EPA administers the renovation certification program; contact information for the EPA Regional Lead Coordinators is at the Where Your Live web page, ***http://www.epa.gov/opptintr/lead/pubs/leadoff1.htm***, which can be reached from a link on the RRP web page. A list of certified renovation firms is available on another link from the RRP web page to ***http://cfpub.epa.gov/flpp/searchrrp_firm.htm***. Information on becoming a lead-safe certified firm is at ***http://www.epa.gov/opptintr/lead/pubs/lscp-renovation_firm.htm***.

2. **HUD LSHR.** HUD's Lead Safe Housing Rule (LSHR) requires the workers, as well as the project supervisor, to be trained in HUD-approved lead-safe work practices for work in federally-assisted target housing. This means that the workers and the supervisor must be certified renovators, or, if any of the workers are not certified renovators, the supervisor be a certified lead-based paint abatement supervisor in addition to being a certified renovator. The EPA's

RRP curriculum is HUD-approved for individuals performing interim controls; it meets both HUD interim controls training requirements and EPA's RRP training requirements.

Some States have policies on qualifications for persons performing interim controls that are different than those of the Federal Government. A list of State agencies that operate EPA-authorized programs to regulate lead-based paint activities is at ***http://www.epa.gov/lead/pubs/traincert.htm***. The EPA Regional Lead Coordinators oversee the development of lead-poisoning prevention efforts within the Region, including managing the lead certification programs in States which are not authorized to operate their own programs; their contact information is at ***http://www.epa.gov/lead/pubs/leadoff1.htm***.

3. **OSHA.** OSHA requires that all potentially exposed workers in the construction industry, which includes most interim control activities, be trained concerning hazards in their workplaces under its rule on Safety Training and Education, 29 CFR 1926.21(b)(2), even if lead exposures are below the action level (see Chapter 9). In addition, OSHA's lead in construction standard, at 29 CFR 1926.62(d)(2)(v)(F), requires hazard communication training on lead for all potentially exposed workers. This provision also requires that employers must provide additional lead-specific training to their workers who are exposed at or above the action level on any single day (also addressed in Chapter 9 and Appendix 6).

4. **Structured On-the-Job Training.** The EPA's Renovation, Repair and Painting (RRP) Rule allows for the certified renovator overseeing a renovation project to conduct on-the-job training (OJT) of workers instead of their becoming certified renovators (40 CFR 745.225(d)(6)(ix). EPA, in the RRP Rule's preamble (73 *Federal Register* 21691-21769, April 22, 2008, *at* 21721) discussed structured OJT (SOJT) and stated that it had decided not to establish an SOJT program as a requirement for training renovation project workers who are not themselves certified renovators.

These *Guidelines* encourage renovation firms to consider training uncertified workers using SOJT approach, as way to produce consistent, accurate, and comprehensive training outcomes. See Appendix 5.1 for information and references on SOJT.

C. Small Amounts of Paint Disturbance

As discussed in Chapter 6, unit II.C.3, of these *Guidelines*, EPA and HUD regulations state that lead-safe work practices and clearance are not required if the total amount of paint disturbed by the work is less than a small amount specified by each agency.

HUD's *de minimis* Threshold. In its regulations, HUD uses the classical legal term for this minimal amount, "*de minimis*." Requirements pertaining to worker qualifications also do not apply if the amount of work is *de minimis*. HUD's *de minimis* levels under its Lead Safe Housing Rule (LSHR; specifically at 24 CFR 35.1350(d)) are amounts up to:

(1) 20 square feet on exterior surfaces;

(2) 2 square feet in any one interior room or space; or

(3) 10 percent of the total surface area on an interior or exterior type of component with a small surface area (such as window sills, baseboards, and trim).

EPA's Minor Repair and Maintenance Threshold. EPA's RRP rule has a larger exemption for minor repair and maintenance work on interiors (6 square feet per room) than HUD's *de minimis* threshold,

but it does not have a small-component aspect, and it limits minor work exempted from its rule to those types that will not cause high levels of dust generation. Specifically, EPA's RRP Rule does not cover minor repair and maintenance activities (40 CFR 745.83) in target housing that disrupt no more than:

(1) 6 square feet or less of painted surface per room for interior activities, or

(2) 20 square feet or less of painted surface for exterior activities, and

where none of the work practices prohibited or restricted by that rule (open-flame burning or torching of lead-based paint, using machines that remove lead-based paint through high-speed operation without HEPA exhaust control; and operating a heat gun on lead-based paint at or above 1100 degrees Fahrenheit) are used and where the work does not involve window replacement or demolition of painted surface areas.

HUD *Guidelines* Recommendation: These *Guidelines* recommend, however, that, because much old paint has some lead, the following practices should *always* be observed when disturbing paint in pre-1978 housing and child-occupied facilities, even if the amount of paint to be disturbed is *de minimis*, unless it is known that all layers of paint to be disturbed have been applied after 1977 or the paint is not lead-based paint:

(1) Never use the prohibited methods of paint removal that are described in Section II.D, below; and

(2) When disturbing paint in housing *occupied by children of less than 6 years of age and/or women who have informed the property owner or manager that they are pregnant,* always clean the work area thoroughly after finishing, preferably with HEPA vacuuming and wet cleaning, and keep residents and pets out of the work area while work is underway and until after the cleanup, and the clearance or cleaning verification, as applicable, has been passed.

D. Lead-Safe Work Practices

Lead-safe work practices are ways to perform paint-disturbing work so that occupants, workers and workers' families, and the environment are protected from exposure to, or contamination from, lead in dust, debris and residue generated by the work. Lead-safe work practices include the following:

1. **Do not use the following paint removal practices except as specified.** Workers should not use the following paint removal methods in HUD-assisted target housing; the methods lettered f and g are permitted in unassisted target housing:

   a. **Open-flame burning or torching.** This can produce toxic gases that a HEPA filter cartridge on a respirator cannot trap (a second, organic, filter is necessary). This method can create high levels of toxic dust that are extremely difficult to clean up; and it can burn down a house.

   b. **Operating a heat gun at surface temperatures at or above 1100 degrees Fahrenheit**. Operating heat guns at such high temperatures can release lead dust and fumes and induce large increases in the blood lead levels of young children (Farfel and Chisolm, 1990; also cited by EPA in the preamble to its final rule on Requirements for Lead-Based Paint Activities in Target Housing and Child-Occupied Facilities. 61 *Federal Register* 45777, August 29, 1996, *at* 45795.)

c. **Machine sanding or grinding without a HEPA local exhaust control and a shroud.** Machine sanding or grinding with both a HEPA local exhaust control attached to the tool, and a shroud that meets the following performance requirement is permissible. The shroud must surround the surface being contacted by the tool with a barrier that prevents dust from flying out around the perimeter of the machine, *and* attached to a HEPA vacuum. However, this work method should be conducted used only by workers trained in its use. Because some dust may still blow out around the perimeter of the machine, workers near the machine should wear half-face respirators (with N100 cartridge) at a minimum. Also, the work area should be completely isolated if the machine is used inside.

d. **Abrasive blasting or sandblasting without HEPA local exhaust control.** These methods should be used only within an enclosure that contains the spread of dust, chips, and debris, and that has a HEPA exhaust. This work method should be conducted used only by workers trained in its use.

e. **Manual dry sanding or dry scraping**, except that dry scraping is acceptable in conjunction with heat guns with surface temperature of less than 1100°F, or within one foot of electrical outlets, or when treating defective paint spots totaling no more than 2 square feet in any one interior room or 20 square feet on exterior surfaces.

f. **Uncontained hydroblasting.** Removal of paint using this method can spread paint chips, dust, and debris beyond the work area containment. Contained pressure washing at less than 5,000 pounds per square inch (PSI) can be done within a protective enclosure to prevent the spread of paint chips, dust, and debris. Water run-off should also be contained. Because contained hydroblasting requires precautions that are beyond the scope of most courses in lead-safe work practices, it should only be used by certified lead abatement workers under the supervision of a certified abatement supervisor.

g. **Paint stripping in a poorly ventilated space when using a volatile stripper that is a hazardous substance** in accordance with regulations of the Consumer Product Safety Commission (CPSC) at 16 CFR 1500.3 and/or a hazardous chemical in accordance with the OSHA regulations at 29 CFR 1910.1200 or 1926.59, as applicable to the work. (This practice is prohibited by HUD regulations but not explicitly by EPA regulations.)

   Stripping with methylene chloride should be avoided. OSHA has found that adults exposed to methylene chloride "are at increased risk of developing cancer, adverse effects on the heart, central nervous system and liver, and skin or eye irritation. Exposure may occur through inhalation, by absorption through the skin, or though contact with the skin." (62 *Federal Register* 1493 (January 10, 1997)). OSHA's permissible exposure limit for methylene chloride in air was reduced in 1997 from 500 to 25 parts per million (29 CFR 1910.1052 for general industry, and the identical 29 CFR 1926.1152 for construction). Methylene chloride cannot be detected by odor at the permissible exposure limit, and organic vapor cartridge negative pressure respirators are generally ineffective for personal protection against it.

   Alternative paint strippers may be safer but have their own safety and/or health concerns. All paint strippers must be used carefully. Always follow precautions provided by the manufacturer.

   It is especially important that persons who use paint strippers frequently, use such chemicals in a well ventilated area. If good ventilation is not possible, professionals equipped with protective equipment should perform the work in accordance with CPSC regulations (16 CFR

1500.3) and /or OSHA's hazard communications standards (29 CFR 1910.1200 or 29 CFR 1926.59) and with any substance-specific standards applicable to the work.

CPSC and EPA recommend that persons who strip paint provide ventilation by opening all doors and windows and making sure there is fresh air movement throughout the room. See the jointly published booklet, *What You Should Know About Using Paint Strippers*, CPSC document 423 (***http://www.cpsc.gov/cpscpub/pubs/423.html***), and EPA publication EPA-747-F-95-002 (search at ***http://nepis.epa.gov/*** for publication number 747F95002).

2. Working wet. Keep the surface damp, except near electrical outlets and fixtures, so sanding, scraping, planing, etc. generate less dust and the dust that is created does not spread as far. When working wet, take care to avoid slippery conditions and electrical shock. Always use Ground Fault Interrupter (GFI) outlets when using power tools. When working on a ladder, do not allow the rungs of the ladder to get wet when spraying or misting. Also, do not get protective plastic sheeting wet; it can become slippery.

3. Protecting occupants and containing dust in the worksite. The worksite should be set up and occupants should be protected in accordance with the guidance in Chapter 8. This guidance varies with the amount of dust that is expected to be generated by the work. Generally, occupants should not be allowed in the work area until after the work is finished and the area is cleaned and either clearance has been passed or cleaning has been verified. Temporary relocation may be necessary. Personal belongings should be moved from the area or covered and sealed. Floors should be protected with plastic sheeting. For dusty jobs, dust should be contained within the room or rooms in which work is conducted by installing plastic sheeting over doors and sealing HVAC vents. Workers should not track dust from the work area to the rest of the dwelling. Waste and debris from the job should be wrapped or bagged and sealed and properly disposed of.

4. Specialized cleaning. After finishing the work, the worksite should be cleaned to assure that the site is free of dust lead hazards and can achieve clearance, or cleaning verification, if applicable. Guidance on cleaning is provided in Section IV of this chapter and Chapter 14. Vacuuming (with HEPA vacuums) and wet cleaning are recommended, and required in most instances.

E. Pre-Renovation Education

While education of the residents, particularly the children's caregivers, is not in itself sufficient to prevent childhood lead poisoning, it can assist residents in reducing the risk that their children will be seriously poisoned. Therefore, education is an important adjunct to any lead hazard control system. See Chapter 6, unit IV.C.6, for information on communicating with residents. See Appendix 6 for information on the EPA's Renovation, Repair, and Painting (RRP) Rule, and HUD's Lead Safe Housing Rule (LSHR), both of which have pre-renovation education provisions.

EPA's RRP rule (most of which is found at 40 CFR Part 745, Subpart E) requires that persons who perform renovation, repair or painting (called, in brief, "renovation") of most pre-1978 housing for compensation provide a lead hazard information pamphlet to owners and residents affected by a renovation within 60 days before beginning the work, describe how, where and when the project will be conducted (and update notify if any of this changes), and, if the work is being conducted in common areas, ensure written notification to each affected unit with the information above and describing how the occupant can obtain the pamphlet, at no charge, from the firm performing the

renovation (40 CFR 745.84). Renovation is defined in the regulation as "the modification of any existing structure, or portion thereof, that results in the disturbance of painted surfaces, unless that activity is performed as part of an abatement" (40 CFR 745.83). Detailed information on implementing pre-renovation education is provided in the EPA's *Small Entity Compliance Guide to Renovate Right,* a handbook on the RRP rule for contractors, property managers and maintenance personnel working in homes and child-occupied facilities built before 1978 (EPA publication EPA-740-K-10-003; ***www.epa.gov/lead/pubs/sbcomplianceguide.pdf***).

This pre-renovation education requirement does not apply to activities are minor repair and maintenance activities (see section II.C, above), emergency renovations, renovations of components that have been found by a certified lead-based paint inspector to be free of lead-based paint, or renovations of housing that is exempt from Title X. Title X exemptions from "target housing" covered by its regulations include: housing built after 1977, housing that is designated as exclusively for the elderly or for persons with disabilities (provided no child of less than 6 years does resides there), and zero-bedroom units.

The pamphlet that must be distributed is the EPA lead pamphlet, *Renovate Right: Important Lead Hazard Information for Families, Child Care Providers and Schools ("Renovate Right"),* or an alternative state or tribal pamphlet approved for this purpose by EPA. The information contained in the lead renovation pamphlet that is given to owners and occupants before beginning the renovation should be provided in appropriate format(s) to meet the needs of all residents including persons with limited English proficiency and in formats that may be needed for persons who are visually or hearing impaired (Executive Order 13166, derived from Title VI of the Civil Rights Act of 1964).

Copies of "Renovate Right" can be obtained from the National Lead Information Center, at 1-800-424-LEAD (hearing- or speech-challenged individuals may access the NLIC number above through TTY by calling the toll-free Federal Information Relay Service at 800-877-8339), or by downloading it from the EPA's or HUD's web site. As of the publication of these *Guidelines*, the pamphlet is available in English and Spanish.

- On the EPA website, the English version is available at ***http://www.epa.gov/lead/pubs/renovaterightbrochure.pdf***, and the Spanish version, at ***http://www.epa.gov/lead/pubs/renovaterightbrochure-esp.pdf***.
- On the HUD website, the English version is available at ***http://portal.hud.gov/hudportal/documents/huddoc?id=DOC_12531.pdf***, and the Spanish version, at ***http://portal.hud.gov/hudportal/documents/huddoc?id=DOC_12532.pdf***.

Further information on the Pre-Renovation Education (PRE) Rule, as it has been modified by the RRP Rule, is available at the PRE Rule's website, ***www.epa.gov/lead/pubs/leadrenf.htm***.

F. Resident Protection and Worksite Preparation During Control Activities

Any activity that disturbs lead-based paint can generate leaded dust. Before beginning paint-disturbing work, workers should set up dust containment to fit the job in accordance with guidance provided in Chapter 8. Whenever dust-generating activities are carried out, residents and particularly young children should stay out of the contained area and should not return until all dust, debris and residue are removed and the containment area or the dwelling unit has been thoroughly cleaned and cleared (see details in Chapter 8). If the work disturbs no more than a *de minimis* amount, described in Section II.C, above, elaborate measures to protect occupants are not

necessary. But, it is always best practice to keep occupants out of the work area until after cleanup, and prohibited methods of paint removal should never be used.

G. Worker Protection

Workers should be protected from exposure to lead by using lead-safe work practices, wearing protective clothing, practicing personal hygiene, and, where these measures are insufficient, using additional engineering controls and, if needed, respiratory protection. Chapter 9 addresses this information in detail.

Some control measures may vary depending on the amount of dust that is expected to be generated by the work. A high dust, paint-disturbing job is defined in Chapter 8 as generally one in which dust caused by the work spreads more than five feet from the work surface. These extensive protections are usually not necessary for very small maintenance jobs. Lead-safe work practices described in Section II.D, above, reduce the amount of dust created by the work and the likelihood of worker exposure.

These protective measures will also help to protect workers' families. Contaminated clothing, shoes or boots brought outside of the worksite, and unwashed hands and other exposed skin surfaces, can result in lead contamination and poisonings from exposure to lead in workers' homes or cars.

H. Waste Handling

EPA has interpreted the household exemption of the Resource Conservation and Recovery Act (RCRA) as applying to all lead-based paint activities, including abatement, interim control, renovation, and remodeling of housing (EPA, 2000x). In 2003 EPA amended its solid waste regulations to codify this policy (EPA, 2003w). A summary fact sheet (publication EPA-530-F-03-007), is available through EPA's website RCRA Online at ***www.epa.gov/epawaste/nonhaz/municipal/landfill/lbp_fs.pdf***. For these purposes, types of housing included under the household waste exemption include multi-family buildings as well as single-family homes. Nevertheless, these *Guidelines* strongly recommend that persons conducting lead-based paint activities treat bulk waste (e.g., painted architectural components being replaced), paint chips, dust and waste water in accordance with the guidance in Chapter 10.

I. Cleanup

These *Guidelines* recommend cleanup at three stages of paint-disturbing work: (1) before the work begins, (2) during the work, and (3) after completion of the work (the final cleanup). Project supervisors should ensure workers should follow the guidance on cleanup during each stage that is provided in Chapter 14, especially its sections IV.B and C,.

J. Clearance

Clearance examinations (including a visual inspection for residual dust, debris and residue) must be conducted following abatement in target housing. (Chapters 12 and 15 describe abatement and clearance examinations, respectively.) Clearance is required after interim control work in target housing receiving federal assistance, unless the interim control work disturbs less than the HUD-specified *de minimis* amount of paint, described in Section II.C, above, and in Chapter 6, unit II.C.3.

These *Guidelines* recommend clearance in other pre-1978 housing even when not required by regulation, such as in most target housing that is not federally-assisted. For projects in unassisted target housing that are not minor repair and maintenance work, EPA requires a visual inspection for residual dust, debris and residue, followed by either clearance or cleaning verification, a visual comparison of the darkening of wet disposable cleaning cloths by wiping them over windowsills, uncarpeted floors, and countertops with the darkness of a reference cleaning verification card, as a means of determining whether post-renovation cleaning has been properly completed (40 CFR 745.85(b)). (See Appendix 6 for more detail.)

K. Notification to Occupants of the Results of Hazard Evaluation and Control

Two Federal regulations require that occupants of housing be informed about lead-based paint or lead-based paint hazards in their homes.

One is the lead-based paint disclosure regulation (Lead Disclosure Rule) issued jointly by HUD (24 CFR part 35, subpart A) and EPA (40 CFR part 745, subpart F). The Lead Disclosure Rule applies at the time of sale or lease of housing built before 1978; some exclusions apply (see Appendix 6 for more information). The Lead Disclosure Rule also applies at the time of lease renewal, if new information is available. Further information on the disclosure rule is available from HUD and EPA and can be found on the Internet at either ***www.epa.gov/lead/pubs/leadbase.htm*** or ***http://portal.hud.gov/hudportal/HUD?src=/program_offices/healthy_homes/enforcement/disclosure***.

Relevant information includes the findings of evaluations (i.e., risk assessments, lead-based paint inspections, and other testing), clearance examinations, and actions taken to reduce any hazards (including interim controls, abatement, or standard treatments). This gives residents the information they need to protect themselves from inadvertent exposure to lead in the home.

In addition to the Lead Disclosure Rule, HUD requires, under its Lead Safe Housing Rule (at 24 CFR 35.125), that occupants of housing receiving Federal assistance be notified of the results of evaluations and hazard reduction activities, including clearance.

- A notice of evaluation or presumption of lead-based paint must be provided within 15 days after the owner or other responsible party receives the evaluation report or makes the presumption. The notice of evaluation must include:

  (1) a summary of the nature, scope, results, and date of the evaluation,

  (2) a contact name, including address and phone number, for more information and to obtain access to the complete report and

  (3) the date of the notice.

- A notice of hazard reduction activity must be provided within 15 days after the work is completed and the clearance examination report has been received. The notice of hazard reduction must include:

  (1) a summary of the nature, scope, and results (including clearance) of the work;

  (2) a contact name for more information, including address and phone number;

(3) available information on the location of any remaining lead-based paint in the rooms, spaces, or areas where work was performed on a surface-by-surface basis; and

(4) the date of the notice.

Notices can be provided to the occupants by either:

- posting and maintaining them in a centrally located common area, with distribution to any dwelling unit where the head of household is disabled; or
- distributing to each occupied dwelling unit (HUD does not require a signed acknowledgment of receipt).

EPA requires, under its RRP Rule (at 40 CFR 745.86(d)), that, if dust clearance sampling is performed, the renovation firm must provide, within 30 days of the completion of the renovation, a copy of the dust sampling report to the person who contracted for the renovation. These *Guidelines* recommend that the person who contracted for the renovation provide at least a summary of the results to residents of the affected dwelling unit(s) within 15 days after receiving the results.

L. Ongoing Lead-Safe Maintenance

The success of interim control measures depends not only on the adequacy of their initial application, but also on whether they remain effective over time. To remain effective they must be maintained and monitored. Residents should be asked to report deteriorating paint. Property owners, or their agents, should routinely (e.g., annually) visit the property and visually ensure that interim controls remain in place. They should also respond promptly whenever an occupant reports any deteriorating paint. Any failure of interim controls that is identified should be corrected promptly. Common areas should be included in these activities as well as dwelling units. See Chapter 6 for a complete discussion of ongoing lead-safe maintenance.

The HUD Lead Safe Housing Rule (24 CFR Part 35, subparts B through R) requires ongoing maintenance in most target housing receiving HUD assistance, with exceptions for assistance in which HUD does not have an ongoing relationship with the property, e.g., disposition of HUD-owned single-family housing, and rehabilitation other than under the HOME program.

M. Reevaluation

These *Guidelines* recommend, and the Lead Safe Housing Rule requires for most HUD housing assistance programs, that a certified risk assessor conduct a reevaluation if hazard reduction has been conducted to reduce lead-based paint hazards found in a risk assessment or if standard treatments have been conducted (24 CFR 35.1355(b)). The schedule is two year intervals after completion hazard reduction until no lead-based paint hazards are found in two consecutive reevaluations. See Chapter 5, section VII, for guidance on reevaluation.

N. Documentation

Lead hazard evaluation, lead hazard control, and maintenance and monitoring activities associated with interim controls must be documented. Several specific documents are of particular importance. These include:

- **Risk Assessment and/or Inspection or Testing Reports**. These documents record the findings of any risk assessment or inspection, including any inspection or testing of painted surfaces and the collection and analysis of samples for determination of the lead content in dust, soil, and/or water. A risk assessment that finds no lead-based paint hazards would also justify issuance of a report.

- **Lead Hazard Control Plan**. This document explains the schedule of hazard control actions in multi-family housing (see Section II.A of this chapter).

- **Notices to Occupants**. This includes copies of notices to occupants of the results of hazard evaluations (risk assessments, lead-based paint inspections, or paint testing) and the results of lead hazard reduction activities, including clearance (see Section II.K of this chapter).

- **Description of Work Done**. For future reference, such as to help them implement the lead hazard control plan effectively, owners should have on file a written description of the nature and locations of the work, its starting and ending dates, who performed it, and any specific suggestions for monitoring. Owners or their property managers who performed, or whose employees performed, renovation work covered by the EPA's RRP rule must keep all records necessary to demonstrate compliance with that rule for at least 3 years after the end of the renovation (40 CFR 745.86). If the renovation work was performed by an outside firm, the owner or property manager should arrange have ongoing access to those records; if the outside firm is planning to dispose of the records at or after the end of the 3-year period, the owner or property manager should arrange to obtain the records for further use in implementing the lead hazard control plan.

- **Clearance Examination Reports**. These documents record the basis for clearance of the property so that it is ready for occupancy (see Chapter 15). If the housing (or the renovation) is not federally-assisted, the renovation firm's client (typically, the property owner or manager) must be provided a copy of the dust sampling report within 30 days of the completion of the renovation; if the housing (or the renovation) is federally assisted, the property owner or manager must send the report to the affected occupants within 15 days. Cleaning verification is different than clearance; both require documentation.

- **Spot Test Kit Results Notification**. When spot test kits are used, the firm must notify its client of the manufacturer and model of the test kits used, the description and locations of the components tested, and the test kit results (see Chapter 15).

- **Reevaluation Reports.** These reports indicate whether the hazard control measures are still in satisfactory condition and whether the dwelling is still in a lead-safe condition. If problems are identified, they prompt corrective action. Reevaluations are performed on a schedule discussed in Section VII of Chapter 5.

- **Maintenance and Monitoring Log**. This log records the results of the property owner's or property manager's monitoring visits. Any repairs made as a result of these visits, or notices of defects from occupants, should also be recorded.

- **Other Applicable Records**. Retain records of worker training in lead-safe work practices, any personal air monitoring, if performed, and correspondence with state and local government agencies on matters such as childhood lead poisoning cases, regulatory compliance (e.g., HUD Lead Safe Housing Rule, EPA RRP rule, OSHA Lead in Construction standard, EPA/State/Tribal waste and lead regulations), or other related matters.

III. Paint Stabilization

How To Do It

1. **Fix moisture problems.** Before stabilizing the deteriorated component(s), eliminate any exterior leaks in the building envelope and any interior water leaks that may be causing paint deterioration. Exterior leaks include: roofing leaks, gutter or downspout problems; missing or damaged doors; missing or deteriorated roof flashing; missing opening trim; missing glass in windows; defective or missing caulk and glazing; poor drainage at foundation walls; and loose fasteners. Interior water leaks include: plumbing leaks; clogged condensation drip lines for air conditioners; missing water pans for hot water heaters; inadequately ventilated attic spaces; clogged bathtub drains; missing tile, grout, or caulking in bathtubs; and windows that won't close completely.

2. **Prepare worksite.** Select and implement worksite preparation and occupant protection measures in accordance with guidance in Chapter 8.

3. **Soil sampling (optional).** For exterior paint disturbing work, if the owner or contractor wishes to document that the work does not increase soil lead levels above applicable standards, collect soil samples near the work surfaces before the work begins. These samples need not be analyzed unless samples collected after completion of the work show soil lead levels above applicable standards. This is an optional procedure that is appropriate if pre-work soil samples are not being taken as part of a risk assessment and if there is a special concern regarding the level of lead in the soil.

4. **Repair substrate.** Repair all rotted structural, siding, or railing components; defective plaster; missing door hardware; loose siding or trim; and loose wallpaper.

5. **Remove loose paint.** Prepare surface by wet scraping or wet sanding. Do not use prohibited methods of paint removal: Open-flame burning or torching, operating a heat gun at surface temperatures at or above 1100 degrees Fahrenheit, machine sanding or grinding without a HEPA local exhaust control and a shroud, abrasive blasting or sandblasting without HEPA local exhaust control, manual dry sanding or dry scraping, uncontained hydroblasting, paint stripping in a poorly ventilated space when using a volatile stripper that is a hazardous substance. (See Section II.D, above.)

6. **Other surface preparation.** Clean, degloss, neutralize (if a caustic paint stripper has been used), and rinse surfaces. Surfaces should be dry before priming or repainting.

7. **Select paint.** Select primer and top-coat by considering longevity, moisture resistance, and organic compound content with low volatility. Paint stabilization involves the application of at least two coats (the primer and the top-coat). Use a primer/top-coat system from the same manufacturer to ensure compatibility.

8. **Apply paint.** Apply all paints at appropriate thickness and according to manufacturer's directions. Apply paint only during proper temperature, wind, and humidity conditions. Allow sufficient time for each coat to dry fully.

9. **Cleanup.** Conduct final cleanup (see The Basic Steps Common to Most Jobs – How to Do It, items 8 and 9, on cleanups, above, and Chapter 14). Consider using a pre-clearance screen if the clearance area may have had high lead levels before the work and/or has rough horizontal surfaces that may make clearance difficult.

10. **Clearance.** At the end of the lead hazard control project, have a certified lead-based paint inspector, risk assessor, or sampling technician conduct a clearance examination and provide appropriate documentation. (See The Basic Steps Common to Most Jobs – How to Do It, item 10, on clearance, above, and Chapter 15.) (If clearance is not required and the project is covered by the EPA's Renovation, Repair, and Painting (RRP) Rule, conduct cleaning verification.)

11. **Ongoing lead-safe maintenance.** Perform ongoing lead-safe maintenance in accordance with guidance in Chapter 6. If required by regulation or the property owner or manager's preference, conduct reevaluations every two years in accordance with guidance in Section VII of Chapter 5.

A. Typical Lead Containing Coatings and Their Failures

The lead in lead-based paint may be found as white pigments (lead carbonate, sulfate, or silicate) or colored pigments (chrome yellow, red lead, gray, and other orange, green, and red pigments).

These pigments were mixed with other components in an oil vehicle, and traditionally thinned with volatile organic solvents and a drying agent. Driers containing lead were used to accelerate the conversion of the liquid coating to a dry film. Paint can fail rather quickly under real life conditions, making ongoing monitoring important. Paint should be quickly, but carefully, stabilized whenever a resident or owner reports that paint is deteriorating.

1. Moisture

Oil paints (virtually all lead-based paints are oil paints) form a hard, usually glossy, low permeable and inflexible coating. Water, either in the form of water vapor or liquid, is the single greatest cause of premature paint coating failures. Once a substrate gets wet, the impermeable paint coating is pushed away from the substrate due to vapor formed by heat from the sun or other sources. Repeated soaking/warming cycles result in microscopic failure of the paint and then accelerated failure as more and more openings become available, allowing the substrate to become increasingly wet.

A significant number of homes are poorly constructed, ventilated, or maintained, and allow moisture to be trapped. Twenty-six main causes of premature paint failure from moisture are described in Figure 11.1.

2. Aging

All binders in paint age, and some cure over time. This continued curing causes the paint to become too brittle to accommodate the normal expansion and contraction of the substrate, resulting in cracking and peeling. Exterior paints are also attacked by sunlight, which can cause chalking. These slow aging processes mean that even a well managed and protected surface will deteriorate eventually.

3. Mechanical Damage

The two basic kinds of mechanical damage (abrasion and impact) can be minimized only by careful management. Paints exhibit tremendous variability in hardness, impact resistance, and abrasion resistance. High performance coatings (e.g., polyamide epoxy, urethane-reinforced alkyds, and epoxy-modified enamels) can withstand over 10,000 more scrubbing cycles than

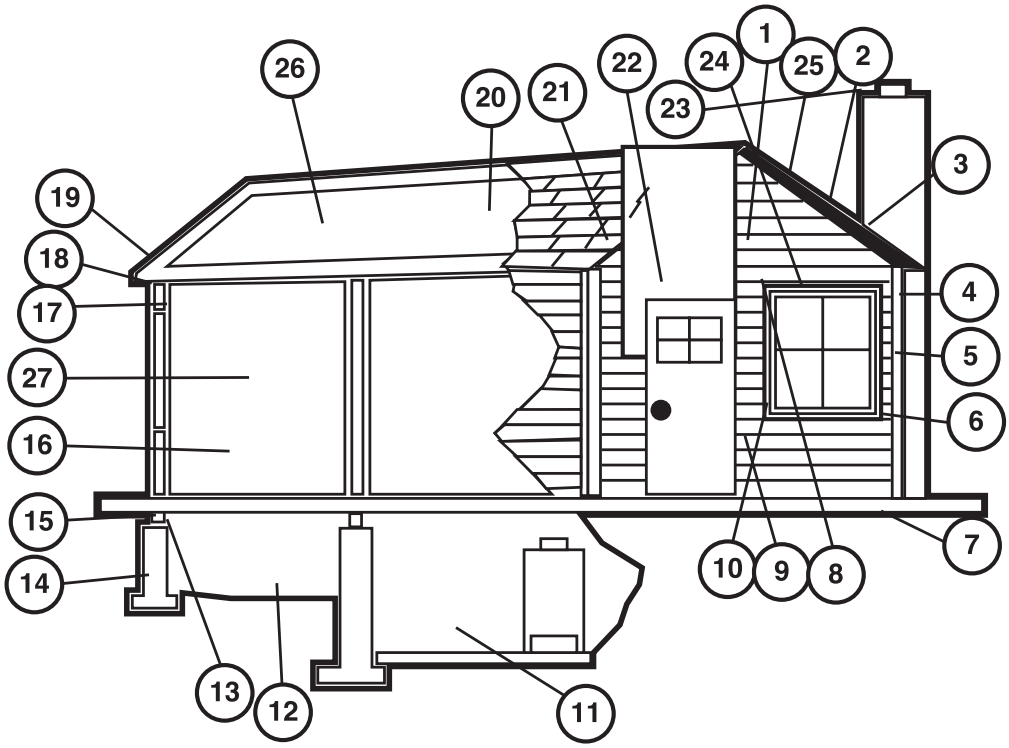

Key to pointers in Figure 11.1:

(1) siding exceeds 14-percent water content
(2) no cricket where chimney meets roof
(3) no step flashing at side of chimney
(4) corner rim not caulked
(5) exposed nail heads rusting
(6) no window wash at window sill
(7) wood contacts earth
(8) no drip or gutter at eaves
(9) poorly fitted window and door trims
(10) waterproof paper not installed behind trim
(11) damp, wet cellar unventilated at opposite sides
(12) no ventilation of unexcavated space
(13) no blocking between unexcavated space and stud wall space
(14) no waterproofing or drainage tile around cellar walls
(15) no foundation water and termite sill
(16) plaster not dry enough to paint
(17) sheathing paper that is not waterproof;
(18) vapor barrier omitted – needed for present or future insulation
(19) roof built during wet, rainy season without taking due precaution or ventilating on dry days
(20) roof leaks
(21) inadequate flashing at breaks, corners, roof
(22) poorly matched joints
(23) no chimney cap
(24) no flashing over openings
(25) full of openings, loosely built
(26) no or inadequate ventilation of attic space
(27) plumbing leaks.

FIGURE 11.1 Moisture-Related Causes of Paint Failure

inexpensive flat vinyl paints (Banov, 1978), although some of these paints may not be appropriate for residential use. Failure from impact or friction is often accelerated by the selection of a low performance coating.

4. Chemical Incompatibility

Since oil and water do not mix, oil paints applied over wet substrates will not adhere. The failure may occur within a week, and may cause the paint to be pulled directly from the substrate. Although oil paints stick relatively well on surfaces slightly contaminated with organic material, dirt, and oil, they do not adhere well to fatty or heavily greased surfaces.

Most latex paints do not adhere to chalky, or smooth and glossy paint. Epoxies will fail prematurely when applied over latex coatings and some oil coatings. Some chemical based strippers contain such large amounts of wax and other stabilizers that almost no subsequent coating will maintain good adhesion. If the substrate has been stripped with a caustic paste and not neutralized properly, the highly alkaline pH will cause deterioration of the subsequent paint. On the exterior, salts may build up on the surface of paint in eaves and soffits and prevent paint adhesion. These salts must be removed with water to allow good adhesion.

Portland cement and older plaster substrates are extremely alkaline. They should be aged or etched with mild acid solutions prior to spot sealing with a primer.

5. Poor Surface Preparation

A 100 year-old house, repainted every 8 years, may have at least 12 coats of paint. If surface preparation for only one of those coats was insufficient, paint will peel. Because of the slow erosion of the binder in exterior paints, chalking can cause poor adhesion of new coatings. Chalking results from natural degradation of the organic binder and consequent exposure of unbound pigment particles on the paint surface that rub off easily like chalk. Chalk must be washed off and appropriate primers applied to prevent subsequent failures. Surfaces must be free from oil, grease, and dirt. Paint stripper residue must be removed, either with solvents or alkali cleaners. Hard, glossy oil films require deglossing to allow water borne coatings to adhere properly.

B. Substrate Condition and Repairs

1. Building Envelope Leaks

The quality and endurance of a paint coating is dependent on the quality of the substrate over which it is applied. The substrate must be dry, structurally sound, and waterproof. Roofing leaks, including porches, gutters, and downspouts, must be fully repaired prior to stabilizing the lead-based paint. Temporary roofing repairs like asphalt patching material, piecing in downspouts and gutters, and short term paint-on coatings are not recommended. Within 4 months, these quick fixes may fail and result in the subsequent failure of the lead-based paint.

In lead-based paint stabilization, the main goal is to create an intact coating that prevents excessive lead exposures. Paint stabilization is most effectively and economically completed after defects, such as the following, have been fully corrected:

- Damaged or missing roof flashing.
- Damaged or missing door or window flashing.
- Siding in contact with soil.
- Poor drainage at foundation walls.
- Water running down siding in excessive amounts, due to a broken or clogged gutter or downspout.
- Missing or deteriorated trim around openings.
- Missing glass in windows.
- Missing, damaged, or deteriorated caulking.
- Loose and rusty fasteners.

2. Interior Repairs and Water

The major type of repair that must be completed prior to paint stabilization involves eliminating moisture sources. Plumbing leaks, especially in bathrooms and kitchens, are often the cause of paint failure on the ceilings and walls below. A few major soak/dry cycles can bring the lead-based paint or leach lead salts to the surface.

Because excessively long hot showers in inadequately ventilated bathrooms may result in paint damage, paint stabilization may not last long if these continue to occur routinely. The ventilation in the bathroom may need to be increased; but see Section II.L, below, and Chapter 6, Section III.C.7, about informing residents on their helping avoid this problem.

The following interior defects should be corrected permanently in conjunction with interior lead-based paint stabilization projects:

- Visible leaks in waste lines, traps, supply lines, or plumbing fixtures above or in rooms undergoing stabilization, or where suspected lead-based paint is present.
- Clogged condensation drip lines for air conditioners.
- Water heaters, refrigerators, or washers without pans and overflows above or in rooms undergoing stabilization or where suspected lead-based paint is present.
- Inadequately ventilated attic spaces.
- Inadequately ventilated bathrooms, kitchens, and laundry areas.
- Clogged bathtub drains.
- Interior windows that are loose or do not close completely.
- Broken or missing glass in windows.
- Improper or deteriorated caulking in bathrooms and kitchens.
- Plugged or blocked weep holes in storm windows.

3. Water Vapor Management

Paint exposed to excess water vapor can fail within hours of initial application. Almost all exterior trim flashing and caulking serves a functional purpose by covering seams and joints and keeping out air and water. All missing or deteriorated trim, flashing, and caulking should be replaced prior to stabilizing the deteriorated component(s). In addition to keeping water from entering through the building envelope, it is equally important that the walls and roof be able to dry should they get wet. Exterior cladding and attic spaces should be ventilated to allow the escape of water vapor. Small wedges can be driven between clapboards at each stud (circle vents are of questionable effectiveness), or the walls may be sealed from the inside using caulking and a very low permeable primer. Soffit and ridge ventilation of at least 1 square inch of vent per 300 square inches of ceiling area is recommended. While venting the attic space, it is important also to seal all openings in the ceiling between the interior and the attic so: (1) the attic venting does not pull moisture from the interior into the attic space where it can condense and cause damage or (2) moisture is not pulled from the exterior into the attic and then into the living space when furnace, dryer, and ventilation fans are pulling air out of the interior of the home.

Open cracks in bathrooms and kitchens should be taped with fiberglass mesh wall tape, spackled, and then sealed to eliminate water penetration. Minor repairs to the plaster substrate should be completed, allowed to dry, and sealed with white shellac or acrylic latex.

The following vapor maintenance defects should be permanently corrected prior to stabilizing lead-based paint:

- Deteriorated or missing caulking or grout at tub and shower surrounds.
- Painted over vents on siding or roof.
- Deteriorated or missing caulking that allows air infiltration (e.g., at trim, outlets, light fixtures, pipe penetrations).
- Uncovered crawl spaces with low permeable vapor barriers. Crawl spaces can be dried by first reducing humidity, removing any standing water, and then applying 6-mil polyethylene plastic sheeting to the floor of the space, especially if it is soil, after all debris has been removed and the soil graded as evenly as possible. The plastic sheeting should go up the side walls of the crawlspace to just above outside grade level. Lapping the seams at least 12 inches or taping the seams is preferred. If there is a heated basement area, it may be possible to eliminate crawlspace vents, insulate the perimeter of the crawlspace, and open the space to the heated basement.

4. Substrate Repairs

Prior to stabilizing lead-based paint, defects such as the following should be permanently corrected:

- Dry rotted or rusty structural, siding, or railing components.
- Wall and ceiling plaster that is loose from the underlying lath (sagging plaster).
- Loose siding or trim.
- Loose wallpaper.

C. General Paint Application Guidelines

1. Appropriate Conditions

Because the guidelines in this chapter have been developed primarily to stabilize and seal lead-based paint, the general requirements for repainting should be rigorously followed. Painters should be professional, skilled, and willing to guarantee their work. Strict adherence to the paint manufacturers' recommendations for air and substrate temperatures, required primers, relative humidity, and recoating time should be conscientiously enforced. The completed primer and top-coat must be applied at the manufacturers' coverage rate, and the total coating thickness should never be thinner than 2.5 mil.

2. When Paint Stabilization Will Not Last Very Long

Under certain conditions, paint stabilization will not last very long. These conditions include:

- When prerequisite repairs are not possible.
- When there is a high probability of future physical damage. One possible example is walls of a narrow stairwell that have visible physical damage from continual bumping, scratching or abrasion. Enclosure with wood wainscot is an acceptable alternative to paint stabilization (as long as the narrower width still meets code requirements).
- Lead paint on children's play equipment. Better options are removal of paint or disposal of equipment.
- Wall surfaces that are structurally unsound.
- Walls with a layer of wallpaper over or under lead-based paint. If there are areas of wallpaper that are not intact to the substrate, consider covering these with fresh wallpaper after removing and patching loose areas, or steaming off the wallpaper, patching the substrate, and starting anew.
- Weep holes in storm windows not cleared to allow ventilation and drainage of water.

Paint stabilization will yield the best results when the surface and building system have been properly prepared. If prerequisite repairs cannot be completed before paint stabilization, the reevaluation period should be shortened substantially. The owner's monitoring frequency should also be increased.

3. General Recommendations for Applying Paint

- Paint only when surface and ambient temperatures are between 45°F and 95°F.
- Do not paint in direct warm sunlight. Very warm temperatures accelerate the drying time of the paint and may compromise the longevity of the paint. Paint after the sun has passed, or so that the paint is nearly dry before the direct sunlight reaches it.
- Maintain coatings in container at a temperature range of 65°F to 85°F at all times on the job.

- Paint only when the temperature is expected to stay above freezing.
- Paint only when wind velocity is below 15 mph.
- Paint only when relative humidity is below 80 percent.
- Observe the recommended spread rate for the coating.
- Tint each coat differently if the same paint is to be used for successive coats to ensure complete coverage.
- Allow sufficient time for each coat to dry before applying another. Use the same brand for each coat.
- Allow adequate time for the top-coat to dry before permitting clients to reoccupy the space.
- Do not put doors back into use until they have dried completely.
- Do not paint over weep holes in the bottom of storm window systems. If the weep holes are blocked or plugged, drill a hole to permit proper ventilation and drainage of rainwater. Failure to clear weep holes will cause premature paint failure in window troughs.

D. Worksite Preparation

See Chapter 8, Section III, Worksite Preparation, for subsections B, on interior worksites, C, on exterior work, and/or D, on windows, as applicable to the project.

Soil sampling is an optional procedure, both before and after the work (see Chapter 15). For exterior work, soil samples may be collected before the work begins if the owner or contractor wishes to document that the work does not increase soil lead levels above applicable hazard standards. These samples need not be analyzed until soil samples have been collected *after* the work has been completed, and such post work samples have been analyzed and compared to soil lead hazard standards. If the lead in soil samples collected after the work has been completed are below applicable standards, the samples collected before the work do not need to analyzed.

E. Surface Preparation

The recommended approaches to surface preparation are as follows:

- All loose surface material should be removed by hand treatments (i.e., wet scraping, wet sanding, or dry scraping with HEPA vacuum exhaust attachment).
- Surface contaminants that prevent adhesion should be eliminated by cleaning (e.g., chemical degreasing, or equivalent household cleaning agent, followed by thorough rinsing).
- Surface gloss should be eliminated by chemical etching, wet sanding, or HEPA vacuum assisted sanding.
- Adhesion to the substrate should be enhanced by chemical etching, applying rust inhibitors, spot sealing, and/or wet sanding.

1. Paint Removal Practices.

Do not use the prohibited paint removal practices described in Section II.D, above.

Wet Scraping. The goal of safe scraping is to minimize the creation of dust while removing loose paint. The best tool for this work is a scraper attached to a HEPA vacuum that very efficiently removes small dust particles generated during scraping.

Large chips that fall to the floor are captured by the puncture resistant, disposable protective sheeting used for floor containment. Continuously misting the surface with water from a small atomizer or garden type sprayer reduces dust generation. A small amount of detergent can be used as a wetting agent. This procedure is best completed by two people – one scraping, the other wetting the surface. Simple dust gathering devices, like a damp rag wrapped around the head of a draw scraper, capture the smallest dust particles while directing the larger paint chips onto the floor containment area.

When working on a ladder, the steps or rungs of the ladder should be kept as dry as possible to avoid slippage. The ladder should not rest on the disposable, impermeable sheeting that is protecting the ground. Slits should be cut through the sheeting so the feet of the ladder can be secured to a firm base, or the feet of the ladder can rest on plywood that is put on top of the protective sheeting. If slits are cut in the protective sheeting, seal them with tape after moving the ladder. Many contractors have found that it is more efficient to rent lifts for high exterior work than to work from ladders.

Wet Sanding. When preparing a surface by sanding (especially with fine finishing grits), it is quite possible to contaminate an entire household with fine particles of lead-contaminated dust. Traditional orbital sanding devices may be used *only* in conjunction with a HEPA vacuum filter attachment (see Figure 11.2). Dry sanding should be replaced by wet sanding *except* near electrical circuits.

Any liquid that does not interfere with subsequent paint adherence may be used (e.g., water, Varsol, phosphoric acid etch for iron). Use sponges to wet sand patching material for drywall, plaster, and wood.

HEPA Sanders

Sanding generates huge amounts of dust. HEPA sanders are sanders fitted with HEPA vacuum to watch and filter lead-dust as it is created. Use a HEPA sander when sanding lead paint. Limit the use of HEPA sanding to flat surfaces for feathering or finishing only.

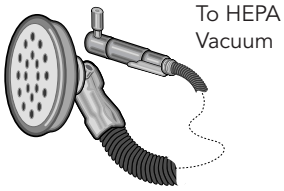

HEPA Sander

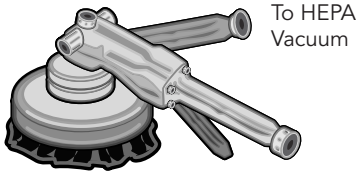

FIGURE 11.2 HEPA Vacuum Sanders

Wood, metal, and painted surfaces that require a fine cosmetic finish may be sanded using wet-dry sandpaper and water or an oil paint solvent. Relatively rough surfaces may be finished using wet foam sanding blocks created by dipping a sponge in aluminum oxide grit. These sponge sanders are ideally suited for wet sanding and can be easily cleaned by immersing in a bucket of cleaning solution.

Rather than wet sanding or HEPA sanding to degloss paint, the painter may chemically treat the surface with specialized products such as Liquid Sandpaper™, taking care to provide adequate ventilation if volatile substances are released.

2. Cleaning Surfaces of Dust and Chips.

Good surface preparation will remove damaged, oxidizing, and deteriorated paint surfaces, but will also create dust and chips that may be leaded. Therefore, after the surface has been allowed to dry, it should be vacuumed to collect surface dust. Prior to applying primer, the surface should be tested for its pH by placing litmus paper against the wet surface. The surface must be rinsed with clear water, or a weak acid solution, until it reaches a pH between 6 and 8 for most new paints.

Oils, Waxes, and Mold. While oil and alkyd paints have some tolerance for oil in the substrate, acrylic latex paints will fail prematurely if applied over greasy or oily surfaces. For waxes like crayons and some polishes, a combination of household ammonia and water should be used for cleaning, followed by a thorough rinse. Surfaces in baths and kitchens that may be prone to contamination by airborne grease and oils, or fatty soap can be cleaned with a suitable household cleaner and rinsed thoroughly. Remove mold with soap and water. For guidance on removing mold, two EPA documents may be helpful: *A Brief Guide to Mold, Moisture, and Your Home* (EPA 402-K-02-003) and *Mold Remediation in Schools and Commercial Buildings* (EPA 402-K-01-001) which can be found at ***www.epa.gov/mold/moldresources.html*** (see References for additional ordering information). On some varnished kitchen cabinets, the finished surface may become coated with organic films after extended use. The surface should be cleaned with a nonflammable solvent before painting.

F. Priming

To maximize the life of a paint job, a system of compatible coatings is necessary. Primers are designed to adhere tightly to the old paint while leaving a rough, bondable surface on the outside. Prior to priming wood and plaster, substrates should be dry. Top quality primers work better, last longer, and treat more substrate types. Consider the following factors when selecting a primer:

- Type of substrate (e.g., wood, metal, gypsum, masonry).
- Type of existing substrate coating (e.g., acrylic latex paint, varnish, oil enamel).
- Interior or exterior application.
- Top-coat (use manufacturers' recommended primers; use a single manufacturer for both primer and top-coat).

1. Oil- and Alkyd-Based Primers

Oil primers are compatible with a system of multiple coats of oil paint over a wood or plaster substrate. The similar solvents used in the old and new paints tend to soften the surface of the paint, creating a better bond. Oil primers are also effective vapor barriers. On the other hand, oil primers contain volatile organic chemicals that can cause adverse health effects and may cost more than waterborne paints. Many states regulate the amount of volatile organic chemicals in paint.

2. Waterborne Primers

The most durable waterborne paints are made with an acrylic or acrylic-containing binder. While acrylic latex primers and top-coats are an excellent combination for new wood, they may not be compatible with the lead-based oil paints that cover the substrate. Waterborne paints usually emit less volatile organic compounds and may be less expensive than oil paints.

G. Top-coats

To maximize cost-effectiveness and prolong the efficiency of a coating used as a lead hazard control method, it is important to purchase paint with a long lifespan. Inexpensive, low grade paint or special mixes should not be used in lead-based paint stabilization programs. Paints and clear finishes used for paint stabilization jobs require outstanding adhesion, durability, chemical resistance, and flexibility. Therefore, the owner should request the most durable and the highest grade of paint. (See Table 11.1 for finishes typically used for lead-based paint stabilization.)

Marine paints free of lead and mercury, and varnishes (used on boats, docks, etc.) are especially durable and abrasive-resistant. They are formulated with more resin than house paints and the resin is of the highest quality. However, some marine paints are not appropriate for residential use. For example, bottom paints or mildew-resistant paints contain poisons and must be avoided, so that lead is not replaced by another toxic substance.

Table 11.1 Finish Coats for Paint Stabilization

Options	Base	Difficulty Level	Comments and Recommendations
Varnish	Oil Alkyd resin, clear finish		Can be touched up very easily.
Acrylic latex	Water	Safest and easiest to use.	May not adhere to alkyd enamels.
Polyurethane resins:			
Alkyd	Oil-volatile organic solvent	Easy to apply. Very durable.	Cannot be touched up without sanding off gloss.
Moisture cured	Volatile organic	Harder to apply.	Needs adequate relative humidity.
Waterborne clear finish	Polyurethane water	Can be hard to apply.	Safer to apply than organic solvent containing coatings.

Source: Adapted from A Consumer's Guide to Renovation, Repair and Home Improvement, J. Wiley & Sons, 1991.

High gloss floor and deck enamels offer the next best level of protection. In general, the higher the gloss, the more durable, impact resistant, and moisture resistant the coating. Among types of paint finishes, gloss, semi-gloss, and eggshell coatings are much more resistant to abrasive cleaners and the detergents used in follow-up maintenance procedures than flat finishes.

A satisfactory service life of 4 to 10 years may be achieved with latex and alkyd-based paints (see Cassens and Feist, 1991, regarding 100 percent acrylic latex paint), although much more rapid deterioration can occur under adverse conditions. Low-cost non-acrylic latex may last less than 4 years. The additional material costs (126 percent to 200 percent) of high priced paints and any special primers are minimal when compared to the cost of performing more frequent paint stabilization.

High performance coatings applied properly to ideal substrates may offer a service life of 10 to 25 years. High performance coatings include epoxy-modified alkyds, epoxies, urethanes, epoxy-polyesters, and polyesters. However, these types of coatings should only be selected after consulting the manufacturer as to the specific intended use(s) and after considering the following factors:

- Possible presence in the new coating of lead, chromate, mercury, or other heavy metals (and other toxic substances).
- Compatibility with existing paint.
- Ability to be repainted in future maintenance operations (epoxies and urethanes are difficult to repaint).

Some lead-based paint encapsulants are made out of similar materials and may last longer than paints on some surfaces (see Chapter 13).

H. Cleaning and Clearance or Cleaning Verification

Containment removal, extensive cleaning, and a clearance examination are required following stabilization and repainting, unless cleaning verification will be undertaken at the end of the work, or unless the size of the project is below the applicable threshold (*de minimis* area for performing clearance, or minor repair and maintenance activities area for performing cleaning verification). These steps are an essential part of the paint stabilization process. (See Section II.I of this chapter and Chapters 14 and 15 for additional discussion of cleaning and clearance.)

For exterior work, if the owner or contractor wishes to document that the work did not increase soil lead levels above applicable standards, soil samples should be collected before work begins and again at clearance. See Section III.D, above.

I. Maintenance

Immediately after completion of any paint stabilization job, the paint begins the slow process of deterioration from mechanical damage, ultraviolet rays, rain, snow, and wind. A well-prepared substrate, which is primed, and top-coated with premium house paints, can withstand between 4

and 10 years of weathering in temperate climates. At the other extreme, a small scratch in a metal railing located in a coastal town may lead to extensive corrosion and major paint failure within a much shorter time. Assuming a proper paint job, paint life is directly related to the environment to which it is exposed. Cyclical changes in the environment are responsible for the greatest rate of paint destabilization. Rapid changes in temperature, moisture content, and relative humidity cause small stress cracks at joints and between dissimilar materials. Exterior paint life can be extended considerably by annual inspections and maintenance (spot scraping, spot priming, and top-coating deteriorated areas). While a new paint job on interior plaster and wood can last 5 to 10 years with only minor fading, repainting will be required much more frequently in dwellings with more wear and tear. Spot priming and spot top-coating as soon as any deterioration is noticed can extend the life of the interior surfaces.

IV. Treatment of Friction, Impact, and Chewable Surfaces

How To Do It

1. **Prepare worksite.** Select and implement the appropriate worksite preparation (see Chapter 8).
2. **Window treatments.** For windows, remove stop bead and parting strip and dispose of properly. Wet scrape deteriorated paint. If the window trough is badly weathered, cap with back-caulked aluminum coil stock. If necessary, repair window weight and pulley system. If further protection is needed, consider installing a new window channel or slide system. Re-glaze if necessary.
3. **Door treatments.** For doors, remove stop from jamb and dispose of properly. Remove door by pulling out hinge pins. Mist and plane door to eliminate friction points. Replace hinges if necessary. Reinstall door and install new stop. If door knob is banging against the wall, install doorstop on floor or wall.
4. **Stair treatments.** For stairs, install a hard, cleanable covering on treads (e.g., rubber tread guards). Carpeting may be used instead, but it must be securely fastened so that it does not cause abrasion. Stabilize paint on banisters, balusters, and newel posts.
5. **Chewable surfaces.** For chewable surfaces such as window sills, remove lead-based paint, or enclose with back-caulked aluminum coil stock, or encapsulate with puncture-resistant epoxy-based or similar material.
6. **Drawers and cabinets.** For drawers and cabinets, remove and replace cabinet doors or remove paint by offsite stripping. Strip paint from drawers and drawer guides or plane impact points and repaint. As an alternative, install rubber or felt bumpers at points of friction or impact.
7. **Floors.** At a minimum, stabilize lead-based paint on porches, decks, and interior floors with polyurethane or high quality abrasion-resistant paint. For a more durable treatment, cover with carpeting, sheet vinyl, or tile, or enclose or replace with new flooring.
8. **Cleanup.** Conduct final cleanup (See The Basic Steps Common to Most Jobs – How to Do It, items 8 and 9, on cleanups, above, and Chapter 14).

9. **Clearance.** Have a certified risk assessor, certified lead-based paint inspector, or certified sampling technician conduct a clearance examination. (See The Basic Steps Common to Most Jobs – How to Do It, item 10, on clearance, above, and Chapter 15.)

10. **Ongoing lead-safe maintenance.** Perform ongoing lead-safe maintenance and monitoring of treatments (see Chapter 6). Reevaluations, if required by regulation or the property owner or manager's preference, should be conducted by certified risk assessors at two year intervals (see Chapter 5).

A. Definition of Terms

1. Friction Surfaces

Friction surfaces are those surfaces covered with lead-based paint that are subject to abrasion, which may generate leaded dust. For a friction surface to be a lead-based paint hazard, as defined by EPA regulations at 40 CFR 745.65(a), there must be a dust lead hazard on the nearest horizontal surface (e.g., floor or interior window sill) underneath or below the friction surface. A dust lead hazard is defined by EPA as equal to or exceeding 40 µg/ft² on floors or 250 µg/ft² for interior window sills based on wipe samples. See Chapter 5 for more information on identification of friction surface hazards. The most critical friction surfaces are generally those portions of a window that are rubbed when the window is opened and closed (see Figure 11.3). The actual area(s) of adjacent surfaces that rub together should not be painted. This includes the jamb, stop bead, and parting strip, and sometimes the sash. Other common friction surfaces include tight fitting or rubbing doors, cabinet doors and drawers, stairway treads and railings, and floors or stair treads painted with lead-based paint, including exterior decks and porches.

FIGURE 11.3 Window before and after friction treatment.

Friction surfaces on doors and windows will generate less leaded dust when they are kept in good operating condition and in a state of good repair. Friction surfaces can also often be covered with a temporary or permanent covering to eliminate the friction. The covering itself, however, must be abrasion resistant. However, if the component is deteriorated, it may be more cost effective to simply replace it than to attempt to treat friction surfaces (see Chapter 12).

2. Impact Surfaces

Impact surfaces are surfaces that tend to be bumped or banged repeatedly. To be a lead-based paint hazard that is associated with an impact surface, according to EPA regulations at 40 CFR 745.65(a), the surface must be painted with lead-based paint that is damaged or otherwise deteriorated as a result of impact from a related building component, such as a door knob that knocks into a wall, or a door that knocks against its door frame. Paint that is damaged as a result of misuse, such as from children banging toys against the wall, may be deteriorated paint. If that deteriorated paint is lead-based paint, it is a lead-based paint hazard, but it is not considered an impact surface.

Paint that is damaged as a result of impact can cause small chips of paint to become dislodged and fall to the floor, covering the floor with small amounts of loose lead-contaminated dust and chips. The most common impact surfaces are doors, and door jambs, and door trim (see Figure 11.4).

Impact surface problems can be lessened by re-hanging doors so they open and close properly, and by installing door stops with impact absorbing tips.

3. Chewable Surfaces

A chewable surface is an interior or exterior surface that a young child can mouth or chew (see Figure 11.4). A chewable surface is the same as an "accessible surface" as defined in Title X. Hard metal substrates and other materials that cannot be dented by the bite of a young child are not considered chewable.

According to EPA standards at 40 CFR 745.65(a)(3), a chewable surface is a lead-based paint hazard if the surface is coated with lead-based paint and there is evidence of teeth marks. Furthermore, these *Guidelines* take the position that it is not necessary to treat a chewable surface if a child of less than six years of age does not reside in, or regularly visit, the dwelling unit or common area.

FIGURE 11.4 Examples of impact surfaces (left) and chewable surfaces (right). The window sash has large teeth marks.

B. Lead Hazard Control Measures

The treatments described below require special construction and cleanup skills that should be implemented by trained personnel only.

1. Window Systems

If windows do not open and close smoothly, they may be a significant source of leaded dust and chips in the home. The following paragraphs describe interim control methods of reducing friction surface hazards associated with windows. It is generally acknowledged, however, that windows are the most complex components to treat short of replacement. Window paint tends to deteriorate more rapidly than other painted surfaces due to moisture, variations in temperature, and exposure to the elements. In addition, painted friction surfaces, including the jamb, stop bead, and parting bead may be abraded or "sanded" each time windows are opened and closed. If the wood becomes weathered, dust is trapped and is difficult to remove.

- Before beginning any window treatment, prepare the worksite in accordance with guidance in Chapter 8. Also, vacuum the interior sill and trough areas to remove any loose paint chips, dust, or debris (see Figure 11.5).

- For a typical double hung sash, mist the stop bead holding in the lower sash with water. Score the edges with a razor knife to facilitate its removal. Pry off the parting bead (see Figure 11.6), wrap it in plastic, and seal the package with tape for disposal. Next, remove the lower sash (see Figure 11.7), sash weights and stops (see Figures 11.8 and 11.9). The jamb, parting bead, sash, window trough, and peeling trim should be misted with water. Loose and flaking paint should be carefully scraped away, and repairs made (see Figures 11.10 and 11.11). Clean and reinstall the window (see Figures 11.12 to 11.14).

FIGURE 11.5 Prepare the worksite and pre-clean the window.

FIGURE 11.6 Remove parting Abead.

FIGURE 11.7 Remove the bottom sash, sash weights and stops.

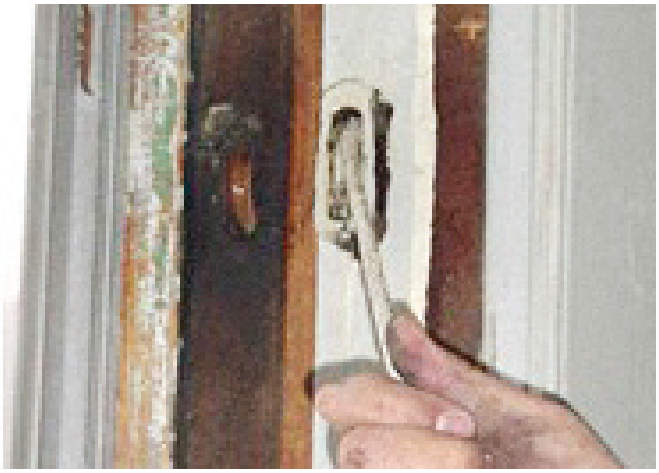

FIGURE 11.8 Remove sash controls/weights.

FIGURE 11.9 Window after removal of sash weights.

FIGURE 11.10 Rebuild damaged sash with filler or putty.

FIGURE 11.11 Wet plane edges of sash to fit new jamb liners.

FIGURE 11.12 Vacuum window again.

Figure 11.13 Fit sashes into jamb liners.

Figure 11.14 Reinstall sash into jamb.

- Vacuum all surfaces again, paying particular attention to the window trough. If badly weathered, the window trough should be capped with aluminum coil stock or vinyl (or equivalent), which is first back caulked and then nailed into place.
- Scrub all surfaces thoroughly with a cleaning agent suitable for leaded dust removal, and rinse with clean water. Any necessary repairs to the weight and pulley system should be made at this time. Reinstall the sash with a new stop bead. Wet scrap any additional paint that was loosened by the hammering. All surfaces should be vacuumed one more time. The new stop bead should be primed and painted.
- Cleanup the worksite in accordance with guidance in Chapter 14. Generally, the impermeable protective sheeting used to protect the surrounding area should be misted, folded with the dirty surface inside, and placed in a heavy duty plastic bag or wrapped with heavy duty polyethylene sheeting. The bag or package should be sealed and labeled to identify the contents for later disposal. Floor surfaces should be vacuumed beneath the protective sheeting and several feet around the sheeting on each side. Other horizontal surfaces in the containment area should also be vacuumed. The floor and other horizontal surfaces should be wet washed with the cleaning solution and rinsed with clean water. Vacuum any rough horizontal surfaces a final time.
- For further protection install replacement window channels or slides. Aluminum, vinyl, and polyvinyl chloride (PVC) plastic channels are available (see Figure 11.9). It should be noted, however, that these "jamb liners," as they are sometimes called, have a very high failure rate. The Evaluation of the HUD Lead-Based Paint Hazard Control Grant Program found that 46 percent of the jamb liners failed three years after installation. (NCHH, 2004) Over half of the failures were attributed to inadequate installation, and 29 percent failed because they were damaged.
- In this case, both the stop and parting beads should be removed, both sashes taken out, the chain and pulley system disconnected, and the pulleys removed. The old sashes should be planed (with HEPA exhaust), re-caulked, primed, and painted. All other surfaces should receive the same treatment as described above. The jambs should be repainted, the window channels installed with the old sashes, and a new interior stop bead.

- Covering painted surfaces with coil stock or channel systems may be considered by some State or tribal lead certification agencies to be an enclosure abatement measure combined with interim controls since the whole window system is not enclosed. It should be noted that this approach provides a great deal of flexibility to the property owner. In many cases, it will permit the most cost-effective strategy to be used.
- If windows are badly deteriorated, it may be more cost effective to replace them, particularly in young children's bedrooms, or in rooms in which young children frequently play.

2. Door Systems

Doors present a problem when the doorframe becomes misaligned due to settlement, or when multiple coats of paint reduce frame clearance to the point where the door sticks, rubs, or even chips paint on the door or doorstop when opened and closed (see Figure 11.15). The simplest approach is to re-hang the door so that it no longer rubs against the doorjamb.

FIGURE 11.15 Stabilizing paint on doors: Wet planning (left) and wet sanding (right) deteriorated paint can create significant amounts of dust.

To accomplish this, prepare the work area in accordance with guidance provided in Chapter 8. Heavily painted stops on jambs can be misted, scored with a knife, and pried loose. The stop should be wrapped in plastic and sealed with tape for disposal. Friction points on the door should be noted. Hinge pins should be removed and the door carefully planed (preferably outside the unit) to eliminate the friction points. (Note: Planing of doors will generate considerable leaded dust and paint chip contamination and may be more easily completed offsite in a controlled environment.) A new stop, if necessary, should be installed and any paint loosened by the hammering should be wet scraped. The new stop and planed areas should be primed, and all surfaces repainted, as described in Section II of this chapter. Cleanup the worksite in accordance with guidance provided in Chapter 14.

3. Stair Systems

There are a number of treatments that will control lead hazards on stairs. Installation of rubber tread guards will lessen or eliminate friction on the tread (see Figures 11.16 and 11.17). The tread guards should cover the entire width of the stairs. Do not use precut tread guards if they do not cover the entire width of the stair.

Covering the treads *and* risers with new carpeting can be useful in lessening friction and impact. It is important that carpeting be securely installed and cover the entire width of the stairs, since loose fitting carpeting can cause abrasion and subsequent dust releases. However, since carpeting must be vacuumed thoroughly and frequently to prevent the accumulation of deeply embedded dust lead, installation of a hard, cleanable surface is generally preferable to carpet.

4. Chewable Surfaces

The most common chewable surface is a protruding interior window sill, although other components have been chewed by children. The objective in treating such surfaces is to either remove the lead-based paint (using one of the paint removal methods described in Chapter 12) or cover the component with a puncture resistant material. For the latter approach, two options are aluminum coil stock or a hard, puncture resistant encapsulant. Install coil stock as described above for window troughs. Install encapsulants as described in Chapter 13.

FIGURE 11.16 Before and after stair treatments.

5. Baseboards and Outside Wall Corners

Damage to baseboards subject to frequent impact can be lessened by installing shoe molding at the bottom of the baseboard (see Figure 11.18). This relatively inexpensive treatment provides a barrier that prevents chair and table legs from actually striking the lead-based painted surface.

If there is existing shoe molding that has been damaged beyond repair, it should be removed by misting the surface, scoring with a razor, and prying the molding loose. The removed molding should be wrapped in plastic and sealed with tape for disposal. Since the baseboard is not necessarily removed, installation of new molding is a combined abatement/interim control measure. New shoe molding should then be back-caulked.

Impact or abrasion of outside corners of walls can be reduced by the installation of a wooden or plastic corner bead (see Figure 11.19).

A rubber tread with metal nosing works well. Rubber nosing that fits snugly on the nose may work if the stairs are not used very often.

- Enclose risers with thin plywood (like luan plywood) or some other hard material. Whatever you use must fit snugly.
- Back caulk the edges of treads. Place them and nail or screw them down. Screw or nail the metal nosing on.

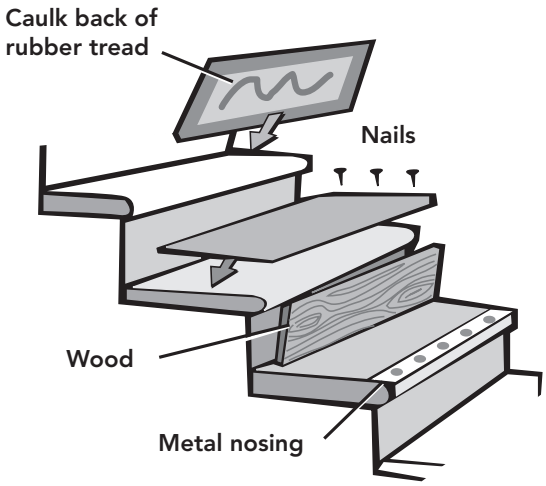

FIGURE 11.17 Covering Stairs with Tread Guards.

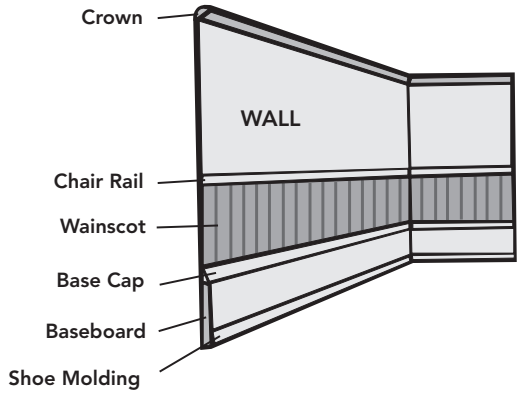

Figure 11.18 Shoe Molding Is an Acceptable Impact Surface Treatment for Baseboards

FIGURE 11.19 Corner Bead Coverings Can Be Used on Outside Corners of Walls.

6. Drawers and Cabinets

Drawers and cabinets coated with lead-based paint present a potential risk when doors or drawer facings do not fit properly. This is especially important when the cabinet or drawer is used for storing food, eating utensils, or bathroom articles, such as toothbrushes. Cabinet doors can be carefully removed and discarded, or can be stripped offsite and planed where necessary to fit properly, and repainted. These activities should only be performed after all articles are removed from the cabinet and the immediate area is contained. The exterior and interior of the cabinets should be thoroughly cleaned before articles are returned.

Drawers can also be removed and stripped offsite. Drawer covers can be planed at impact points and repainted. Installation of rubber or felt bumpers will also reduce impact with the painted surface of the cabinet.

7. Porches, Decks, and Interior Floors

Porches, decks, and interior floors with lead-based paint can be significant generators of paint chips and leaded dust particles through abrasion or impact. At a minimum, the paint should be carefully stabilized and covered with polyurethane or high quality paint. Decks and floors must be smooth enough so that dust can be removed by normal cleaning without special equipment. If funds are available, abatement of floors is strongly recommended, usually through enclosure with new flooring or covering or replacement.

Table 11.2 Sticky Tape Technique for Removing Loose Paint on Impact Surfaces for Owner / Occupants or Residents

1. Place a piece of plastic or paper beneath the area in question.
2. Press a piece of wide sticky tape firmly over the area of loose or chipping paint.
3. Wait a few seconds and then carefully remove the tape, taking the small chips of paint with it.
4. Place the tape in a plastic bag.
5. Carefully fold the piece of plastic or paper that was beneath the area and place it in the bag.
6. Seal the bag and clean the area.
7. Dispose of all waste materials in a secure manner.

V. Dust Removal and Control

How To Do It

1. **Dust lead hazard standards.** If dust wipe samples are collected and analyzed by a laboratory, and the level of lead in dust equals or exceeds the following levels the dust should be removed:

   - Floors (both hard surfaced and carpeted), 40 µg/ft².
   - Interior window sills, 250 µg/ft².
   - Window troughs, 400 µg/ft².
     - Bare floors and window components should also be made smooth and cleanable.

2. **Remove dust lead after controlling other hazards.** Correct any known or suspected lead-based paint hazards before dust removal.

3. **Inspect dust traps.** Visually inspect dust traps, such as radiators and floor grates. If visible dust is found, the component should be cleaned.

4. **Communicate with residents.** Distribute educational materials prepared by EPA or State or local government agencies to residents. The owners of rugs, carpets, drapes and upholstered furnishings are responsible for their care. Recommend to the owners that highly contaminated or badly worn items should be discarded. To discard a rug or carpet, mist the surface with water; seal in plastic sheeting, bags, or containers; and discard properly.

5. **Contain work area for carpet removal.** If contaminated carpets are to be removed, the work area should be contained in accordance with guidance for high dust jobs in Chapter 8.

6. **Vacuum and wet clean hard surfaces.**

   - **Clean all horizontal surfaces, beginning with vacuuming, with a HEPA vacuum, followed by wet cleaning.** A household cleaning agent (vs. a trisodium phosphate solution) is usually adequate. Test the cleaning solution before using it to determine if it will discolor or damage surfaces to be cleaned.
   - **Sequence of cleaning.** If cleaning an entire dwelling unit, begin dust removal at the top rear room in the dwelling, working forward and down. (Keeping a similar sequence of room cleanings on each floor may be helpful for assuring rooms are not missed.) When practical, clean dirty areas within a room while taking tare to avoid spreading dust. Within rooms, start with the highest surface and work down. Clean windows, other dust traps, and finally the floors.
   - **Take care in removing vacuum filters and/or bags.** If practicable, remove filters and/or bags from the vacuum offsite (not on the property) in a controlled environment. If filters or bags must be replaced onsite in the middle of the job, take the vacuum unit outside the house if practicable, and replace them – and protect the change area – as described in Section IV.B.1, below.
   - **Wet clean and rinse.** During wet cleaning, replace rags and mops frequently (at least once per dwelling). Use a three bucket system for floors: one for the cleaning solution, one into which the dirty mop or sponge is squeezed, and the other for rinsing. Change the rinse water at least once in each room. Clean until no surface dust is visible. After cleaning, rinse with clean water and a new rag or cloth. Dispose of dirty water in a toilet.

7. **Clean area rugs.** To clean area rugs, HEPA vacuum the top side with a beater bar or agitator attachment at a rate of 1 minute for each 10 square foot area. Fold the rug in half and vacuum the backing of the exposed half of the rug without using the beater bar at a rate of 1 minute per 10 square feet. Vacuum the exposed floor beneath the rug, the bottom of the rug, and the pad (if there is one), and fold the rug back into its original position. Repeat the process for the other half of the rug. Finally, vacuum the top side again with the beater bar at a rate of at least 2 minutes per 10 square feet. To summarize:

   - Vacuum the top side for 1 minute per 10 square feet.
   - Vacuum the bottom for 1 minute per 10 square feet.
   - Vacuum the top again for a final 2 minutes per 10 square feet.
     - This is a total of 4 minutes for every 10 square feet of rug. Also vacuum the bare floor under the rug and the pad, if present.

8. **Clean wall-to-wall carpet.** For wall-to-wall carpeting that cannot be folded over, HEPA vacuum at a rate no faster than 2 minutes per 10 square feet in a side-to-side direction. Follow this by another pass at the same rate in a direction perpendicular to the direction of the first vacuuming, for a total of 4 minutes per 10 square feet. For wall-to-wall carpeting, it is not feasible to clean the floor underneath the carpeting. To attain an even higher level of cleanliness, steam clean the carpet using a regular commercial cleaning system after performing the HEPA vacuuming.

9. **Clean upholstered furnishings.** To clean other upholstered furnishings, vacuum each surface three to five times. Steam cleaning is generally not recommended because it may damage the fabric. However, newer steam cleaners have a water extraction feature to prevent water damage to fabric. Test a small section of the fabric for color fastness before cleaning the entire surface.

10. **Clean drop ceilings and ductwork when necessary.** Clean drop ceilings or the ductwork for forced air systems only when they are expected to be disturbed. Vacuum and wet clean air vents or registers. Replace air filters in the forced air systems at the time of cleaning.

11. **Conduct clearance dust wipe sampling on carpets, rugs or furnishings that were cleaned to determine if the cleaning was effective.** Have a certified lead-based paint inspector, risk assessor, or sampling technician conduct a clearance examination (see The Basic Steps Common to Most Jobs – How to Do It, item 10, on clearance, above, Chapter 15). Repeat cleaning, if necessary.

12. **Ongoing lead-safe maintenance.** Perform ongoing lead-safe maintenance in accordance with guidance in Chapter 6. If required by regulation or the property owner or manager's preference, conduct reevaluations every two years in accordance with guidance in Section VII of Chapter 5.

A. Introduction

Dust removal is a type of interim control that involves an initial treatment followed by clearance and re-cleaning as needed. This section provides information on when the removal of leaded dust alone is an appropriate interim control and how to accomplish it. Some dust removal will *always* be an element of interim control measures, either as a stand-alone treatment or as part of cleanup following other work.

1. Sources and Locations of Leaded Dust

Lead in settled house dust is the main source of lead exposure for young children. Leaded dust can come from deteriorating lead-based paint on interior and exterior surfaces, abrasion of lead-based paint on friction and impact surfaces, and the disturbance of lead-based paint during maintenance, renovation, or remodeling activities. Leaded dust can also originate from exterior soil or dust. Sources of lead-contaminated soil include weathering or scraping of exterior lead-based paint, past use of lead additives in gasoline, industrial point sources, and demolition and paint removal from buildings and steel structures. Lead-contaminated soil and exterior dust can be tracked inside by humans and pets or carried indoors by wind. Leaded dust can be produced by activities related to hobbies and can be carried home on the clothing of workers exposed to lead. Table 11.3 provides a summary of potential sources of lead in settled house dust.

Table 11.3 Potential Sources of Lead Containing House Dust.

Source	Process That Contributes to Lead in House Dust	Key Sites
Interior lead-based paint	Deteriorating paint. Friction/abrasion.	All surfaces. Windows, doors, stairs, floors, carpets, rugs, window coverings (drapes and curtains), mats, and upholstered furnishings.
	Impact.	Door systems, openings, baseboards, corner edges, chair rails, and stair risers.
	Water damage.	Walls, trim, windows, and ceilings
	Planned disturbances: (maintenance activities, repainting, remodeling, abatement).	All surfaces coated with lead-based paint.
Exterior lead-based paint	Tracking (by humans and pets) and blowing of leaded dust from weathered, chalked, or deteriorated exterior lead-based paint; also direct contact with such paint.	All exterior lead-based painted components, including porches and window sills.
	Demolition and other disturbances of lead-based paint on buildings and nearby steel structures.	Exposed soil, sandboxes, sidewalks, and window troughs.
Soil and exterior dust	Tracking (by humans and pets) and blowing of exterior soil/dirt contaminated with lead from deteriorating exterior lead-based paint; past deposition of lead in gasoline.	Exposed soil, sandboxes, sidewalks, streets, and window troughs.
Point sources	Releases from lead related industries (i.e., smelters, battery recycling, incinerators).	Location of point sources.
Hobby activities	Cutting, molding, and melting of lead for bullets, fishing sinkers, toys, and joining stained glass. Use of lead containing glazes and paints. Restoration of lead-based painted items.	Rooms in which hobbies are pursued.
Occupational sources	Transport of lead-contaminated dust from the job to home on clothing, tools, hair, and car or truck.	Vehicles, laundry rooms, changing areas, furniture, and entryway rugs.

Leaded dust can be found on surfaces and in crevices throughout a dwelling. Certain surfaces can act as major reservoirs of lead-contaminated dust, including window troughs, worn floors, carpets, and upholstered furnishings (see Table 11.4). Cleaning carpets, upholstered items, and worn floor surfaces can be difficult due to embedded dust and dirt. Furthermore, lead-contaminated dust can rapidly re-accumulate on household surfaces following dust removal if the conditions contributing to the contamination are not controlled (Tohn, 2002; Lanphear, 2000).

Table 11.4 Major Dust Reservoirs and Potential Dust Traps.

Interior		Exterior
Window sills	Upholstered furnishings	Porch systems
Floors/steps	Window coverings	Window troughs
Cracks and crevices	Radiators	Steps
Carpets and rugs	Grates and registers	Exposed soil
Mats	Heating, ventilation, air conditioning filters	Sandboxes

Lead-contaminated dust in carpets and rugs, window coverings (drapes and curtains), mats, and upholstered furnishings is a hazard whether those items are supplied by the owner of the dwelling or by residents. Owners of rental units are responsible for cleaning such items or removing and replacing them only if they belong to the owners. However, the owner should try to provide residents with educational material furnished by a government agency or a qualified lead poisoning prevention organization. Such material should include a warning that carpets and rugs, window coverings, mats, and upholstered furnishings may contain dangerous levels of leaded dust and that those items should be thoroughly cleaned or preferably removed and replaced if they are found to be contaminated.

2. Removing Leaded Dust From a Dwelling

Both large, visible dust particles, and small particles not visible to the naked eye, need to be removed (see Figure 11.13).

A combination of vacuuming and wet cleaning is recommended for leaded dust removal. Use of a HEPA vacuum is preferred. Wet cleaning is conducted with a solution of ordinary household detergent. Trisodium phosphate detergent is banned in many states because of potential environmental impacts, so it is not recommended. Even with special equipment

and procedures, leaded dust can be difficult to remove from dust traps, carpets, non-smooth surfaces, and surfaces abated by paint removal methods such as caustic chemicals (Ewers, 1994; Farfel and Chisolm, 1991; Farfel and Chisolm, 1987b).

Workers and residents removing leaded dust should not spread lead from one household surface to another (cross contamination). Avoiding cross contamination requires special knowledge, equipment, procedures, and precautions to protect residents, workers, and the environment. Enhanced routine cleaning procedures, and practices described in this chapter are recommended for use by property owners over ordinary cleaning practices and procedures. This is not to imply that routine housecleaning is totally ineffective. However, in certain cases, routine housecleaning may need to be augmented by the special procedures detailed in this chapter, since smooth surfaces are easier to clean (see Figure 11.20).

FIGURE 11.20 Turning a Window Sill and Trough Into a Smooth and Cleanable Surface. Window pre-treatment (left) and post-treatment (right).

The cleaning protocol contained in this chapter is different from that used following lead hazard controls and other paint disturbing work, which is described in Chapter 14. The main difference is that only horizontal surfaces (and vertical surfaces undergoing paint stabilization, as explained in Section II of this chapter) are usually cleaned for dust removal. For cleanup following lead hazard control, and other paint disturbing work, walls and horizontal surfaces are cleaned following high dust jobs.

3. Creating Cleanable Surfaces and Determining Whether Dust Removal Alone Is Adequate

A risk assessment is recommended to determine whether the removal of leaded dust alone is an appropriate interim control, or whether other interim controls are needed in addition to dust removal. If no lead-based paint inspection or risk assessment has been performed, the property owner should presume that lead-based paint is present on all painted surfaces and that all horizontal surfaces have excessive dust lead levels.

The rest of this section will describe how risk assessors and owners should check floors and floor coverings to plan for dust removal activities.

- **Check condition of floors.** Smooth and intact floor surfaces, such as vinyl or linoleum sheet goods that still have a smooth finish and wooden floors that have a good finish of sealant (e.g., polyurethane or deck paint) can be effectively cleaned. If a floor surface is not smooth or intact, it will require the application of an appropriate sealer or covering and/or repair in order to make it smooth and cleanable. Examples of non-smooth floor surfaces include floor coverings with worn areas or tears; wood floors with gaps, cracks, splinters, and areas with no sealant coating; unsealed concrete floors; and replacement flooring with no finish treatment (e.g., plywood).

- **Check carpets, rugs, entryways, and mats.** If possible, small rugs and mats should be machine washed. Wall-to-wall carpets and large area rugs in fair to good condition can be cleaned, or removed and discarded, or replaced (see section on carpets/rugs below). Consider discarding rugs, carpets, and mats that are at the end of their useful lives, since cleaning may not be effective (see below for precautions on removal of carpets) (Ewers, 1994; CH2MHILL, 1991).

- **Check for other potential dust traps.** In addition to carpets, rugs, and mats, other potential dust traps include radiators, floor grates and registers, drapes, blinds, and upholstered furnishings. These items should be included in the plan for dust removal. In rental properties some of these items may not belong to the building owner. Owners are responsible for the items they own, while residents are responsible for their own property. However, it may be in everyone's best interest to include all of these items in the dust removal plan.

4. Planning and Preparations

Once it has been determined that dust removal is an appropriate approach, the owner should determine if the dwelling unit will be occupied or vacant while the dust removal is occurring. Dust removal work may be performed by contractors, maintenance staff, or homeowners. Individuals performing the work should be properly equipped and trained in dust removal.

If dwelling units are occupied, the owner should coordinate with residents to ensure that the roles of all involved in the process are clear. The job should be organized so that dust removal work is performed in 1 day to minimize inconvenience to residents. Additional personnel and equipment may be required to perform simultaneous work in multiple rooms.

Role of residents. See Section I.D, above, regarding preventive measures that can be performed by residents.

Owners should provide residents with educational materials prepared by public agencies that indicate how residents can help in removing leaded dust. The materials should indicate that residents should perform the following tasks regarding property the residents own before the professional dust removal occurs:

- Wet wash all cleanable toys the residents own.

- Store all loose personal belongings that need not be professionally cleaned in boxes, closets, or drawers to provide easy access to floors and other surfaces during dust removal.

- Remove drapes and curtains the residents own and collect any washable area rugs the residents own for cleaning. Clean or arrange for cleaning of these items and store them in sealed plastic bags, or have the cleaners keep them until after the housing owner's lead dust cleaning work is completed.

- Wash blankets known to have been unprotected during renovation or remodeling activity that disturbed lead-based paint.
- Wash or dust un-upholstered furniture the residents own using disposable cloths and spray polish.
- Change filters in heating and air conditioning units, except where routinely performed by the property manager.

5. Responsibilities of Owners

Owners should perform the following tasks prior to dust removal:

- Attempt to schedule dust removal when the dwelling is vacant (such as during unit turnover).
- If the unit will be occupied, notify residents of the date dust removal will occur.
- Provide a written notice/flyer from the local health agency with information on resident responsibilities for preparation and cleaning.
- Provide for the safety of occupants.
- Arrange for dust removal of wood or metal components of windows, built in shelving, radiators, floors, porches, owner supplied carpets and rugs, window coverings, mats, upholstered furnishings, and other dust traps.
- Provide and install cleanable "walk-off" mats at interior entryways. This will help residents control exterior leaded dust that may be tracked into the home (Roberts, 1991).
- Ensure that dust removal contractors comply with contract specifications. Large multi-family contracts may require an onsite monitor.
- Obtain written authorization from residents for dust removal where legal authority does not exist for such activity.
- Arrange for clearance examination.

6. Responsibilities of Contractors

Contractors or maintenance staff should perform the following tasks prior to and during dust removal (City of Toronto, 1990):

- Coordinate with residents and owners or managers of property.
- Cooperate with the client's independent, onsite inspector or risk assessor or other authorized project monitor who may be present on large, multi-family dust removal projects.
- Perform work according to contract/work specifications. In the case where the owner's maintenance staff are performing the work, the owner is responsible for the following (otherwise the contractor is responsible).

- Ensuring that workers are properly trained and protected (see Chapter 9).
- Providing all safety and special cleaning equipment and supplies.
- Taking precautions to minimize damage to residents' belongings.
- Moving major furnishings within rooms to facilitate thorough cleaning.
- Responding to residents' questions, complaints, and concerns.

B. Methods of Dust Removal

The objective of any dust removal strategy is to provide a dwelling unit or common area in which the dust lead levels on all horizontal surfaces are less than the clearance levels. Any cleaning method carried out by a property owner is satisfactory if it meets this performance standard and if workers and occupants are fully protected. The procedures in the following pages describe how best to meet that performance standard.

The dust removal strategy presented in this section focuses on horizontal surfaces and dust traps that have accumulations of surface dust and embedded dust. Contractors and owners must use judgment in determining whether walls should be washed. Embedded dust is dust that is trapped within a fiber matrix (such as carpeting), in cracks and crevices (of wooden floors), under carpets, on greasy surfaces, or ground into surfaces. A combination of vacuuming – a HEPA vacuum is required – and wet cleaning is recommended to remove both surface and embedded leaded dust from household surfaces. For upholstered furnishings vacuuming alone is generally recommended.

1. Cleaning Hard Surfaces

The standard dust removal procedure for hard surfaces and components (e.g., hardwood floors and window components) is HEPA vacuuming followed by wet cleaning. One study found that vacuuming hard surfaces at a rate slower than 1 minute per square meter (approximately 10 square feet) did not remove substantially more leaded dust from hard surfaces than faster methods (Ewers, 1994). Therefore, no speed or time restrictions are necessary for hard surfaces (although such restrictions *are* appropriate for carpeted surfaces, as detailed below). On hard surfaces vacuums should be passed over the entire surface with overlapping strokes using normal speed.

General all-purpose household cleaners have been found to be effective for wet cleaning. Although lead specific cleaners may also be effective, one study found them to be no more effective than all purpose cleaners (Lewis et al. 2006). Trisodium phosphate is not recommended. Not only has it been banned in some areas because of negative effects on the ecology of aquatic systems but research indicates that phosphate content is not associated with effectiveness in removing lead-contaminated dust from residential surfaces (EPA, 1997a; EPA, 1998; Lewis et al 2006). Research also indicates that the effort put into the cleaning, i.e., the amount of pressure applied to the surface and the thoroughness of the cleaning, may be more important than the choice of cleaning agent (EPA, 1997a). Whenever a wet cleaner is used, a small area of the surface should be tested to make sure that it does not damage the surface or its coloring. If so, another wet cleaner should be used.

General work practices

- Clean from top to bottom. HEPA vacuum before wet cleaning. On multistory dwellings, start at the top level in the rear room and work in one direction toward the front. Then repeat the process on the remaining floors in sequence. Within a room, start with the highest horizontal surfaces and work down. This will typically result in the following cleaning sequence: tops of window heads, tops of sashes, mullions, and interior and exterior window sills and troughs. Clean dust traps such as radiators, followed by baseboards, and finally floors, vents/registers, and horizontal components of the ventilation ducts that can be easily reached. When practical, work from clean areas to dirty areas to minimize the spread of leaded dust to clean areas. It is usually not necessary to clean walls and ceilings for dust removal unless those surfaces have undergone paint removal or paint stabilization, or substantial leaded dust has been created in the course of other work.

- When vacuuming, use crevice and brush tools where appropriate.

- If possible, place the HEPA vacuum unit on a smooth, hard surface that has been cleaned, or on clean, durable, polyethylene sheeting rather than on a carpet. Vacuum exhaust, even on HEPA vacuums, can disperse dust when the exhaust airstream disturbs settled dust on a surface. A HEPA vacuum that exhausts air from the top or side, rather than the bottom, helps to minimize dust dispersal. (see Figure 11.21).

- Use disposable cleaning cloths or sponges. Be prepared to dispose of them during the cleaning process and replace them with new ones.

- When cleaning household surfaces other than floors, the cleaning solution may be mixed in a plastic jug and poured directly onto sponges or cloths (EPA, 1992a). This procedure is designed to minimize the contamination of the cleaning solution with leaded dust. Frequently rinse the sponge/cloth in a bucket of clean water.

- For floors, a three bucket system is recommended to minimize the potential for spreading leaded dust from one location to another. The cleaning solution should be mixed in one bucket. Dirty water is squeezed into a second bucket. A third bucket should contain rinse water for the mop head. Frequently, at least once per room, change the rinse water in the bucket. Use a string mop

How to use a HEPA vacuum

1. Lightly mist area with water to keep dust levels down
2. HEPA vacuum all horizontal surfaces

Start at the end farthest from the main entrance/exit. As you vacuum, move towards the main exit and finish there.

Begin at the top of each room and work down. For example, start with the top shelves, the top of the woodwork, and so on, and work down to the floor. Do every inch of the windows, especially the window troughs.

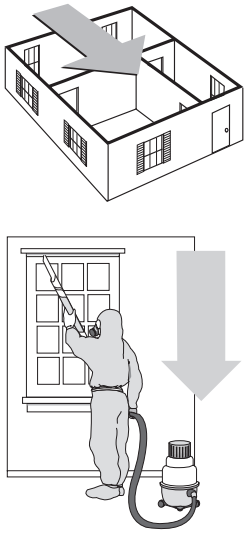

Figure 11.21 How to Use a HEPA Vacuum.

if possible. A sponge mop is likely to just push the dirt in front of it. A final cosmetic rinse is recommended using clean water.

- Clean until surface dust is no longer visible. After cleaning a window sill or a floor, rinse with clean water using a new sponge or cloth.
- To make a cleaning solution, mix with water according to the manufacturer's instructions for recommended concentrations. When using the cleaner, wear gloves and eye protection gear. Follow all manufacturer's instructions and precautions.
- Whenever possible, clean floors and pads underneath rugs and carpets.
- For dust removal projects in multi-family housing, a truck-mounted vacuum unit with a HEPA filter exhaust is preferable. Since the exhaust stream is located outside the dwelling it is not likely to disturb dust inside the dwelling.
- In a controlled environment capable of capturing any dust released by the procedure, remove and dispose of vacuum cleaner bags and filters offsite, according to the manufacturer's instructions. If the filters and/or bags need to be changed onsite in the middle of the job, take the vacuum unit outside the house if practicable. (see Figure 11.22).
  - If filters and/or bags must be replaced outside the building, but still on the property:
    - place the vacuum on a sheet of plastic,
    - replace the filters and/or bags,
    - wet clean the outside of the vacuum,
    - vacuum the plastic,
    - pull up the plastic,
    - vacuum the immediate area, and
    - dispose of the plastic.
  - If filters and/or bags must be replaced inside the building:
    - place the vacuum on a sheet of plastic,
    - replace the filters and/or bags,
    - wet clean the outside of the vacuum,
    - vacuum the plastic,
    - pull up the plastic,
    - vacuum and wet clean the immediate floor area, and
    - dispose of the plastic.

a) Remove the HEPA Vacuum Filters and Disassemble the Vacuum

b) Disconnect Vacuum Bag From Hose Inlet

c) Remove Bag with a Plastic Sheet Underneath

d) Tape Vacuum Bag Closed and Put Inside Plastic Trash Bag

e) Wash/Replace Coarse Prefilters if Necessary

f) Remove & Replace HEPA Filter Assembly.

Figure 11.22 Changing HEPA vacuum filter.

2. Removal or Cleaning of Carpets

Carpeting and area rugs (all referred to here as carpets) can be major traps and reservoirs of leaded dust. Dust embedded in the fibers of carpets and rugs is not easily removed by cleaning.

The two methods of cleaning carpets that are generally available for residential settings are dry vacuuming and hot water extraction vacuuming (which can deliver detergents as well as heated water). Based on limited research, it appears that dry vacuuming has greater efficiency in removing embedded dust particles from carpets than hot water extraction with detergents (Lewis, 2002; Brown, 1982; CH2MHILL, 1991). Wet methods may be a useful supplement to dry vacuuming, especially if the dust is oily, as perhaps from kitchen aerosols.

The fundamental difficulty in cleaning carpets with deeply embedded dust lead is that (1) it is often difficult to remove a high percentage of the deep dust, yet; (2) unless most of the deep dust is removed, periodic vacuuming is likely to draw contaminated dust to the surface, where it is available for exposure to young children. Research indicates that dust lead hazards can be removed from most carpets by sustained vacuuming. The cost of removal from some carpets may exceed the cost of replacement (Ewers, 1994; Roberts, 2004; Roberts, 1999).

Deciding whether to clean or dispose of carpets. The first step in carpet dust removal is to decide if the carpet is going to be cleaned onsite, removed for disposal, or removed for

professional offsite cleaning. It may be preferable to dispose of carpets that are in poor condition or those known to be highly contaminated with lead. In fact it may be more costly to clean a lead-contaminated carpet or rug than to replace it.

Research has found that the following factors are associated with difficulty of dust removal from carpets and rugs:

- **The height and density of the pile**. Shag rugs are most difficult because the longer fibers retain dust particles (Wang, 1995; EPA, 1997c). High density, plush carpets are more difficult than low density, low pile carpets (Lewis, 2002).
- **Wear.** Worn carpeting may have more tangled fibers that make it difficult for dislodged dust particles to travel to the vacuum nozzle (Lewis, 2002). New rugs that have been recently soiled are easier to clean.
- **High dust lead loading.** Very high dust lead loadings are associated with lower collection efficiency (Wang, 1995; EPA, 1997c).
- **Duration of contamination.** The longer the duration of contamination, the more likely the dust particles are deeply embedded.
- **Low relative humidity.** Low humidity may intensify the electrostatic field between the dust particle and the fiber, making it more difficult to dislodge the particle (EPA, 1997c; Wang, 1995).

Removal of carpets. When a carpet or rug is going to be removed from a dwelling for either disposal, or offsite cleaning, the following procedure is recommended to minimize the exposure of workers and residents to leaded dust:

Mist the entire surface of the carpet to keep dust from spreading. Carefully roll up the carpet along with any padding. Wrap the carpet in a sheet of plastic, seal it with tape, and remove it from the dwelling.

If the padding is not going to be removed, clean it using the lead hazard control procedures for cleaning an area rug (see below). Note that the cost of replacing padding is often less than the cost of cleaning it.

Removal of a wall-to-wall carpet may generate significant amounts of airborne lead-contaminated dust, even more than removal of a area rug. Worksite preparation should be similar to a high dust job (see Chapter 8), although, of course, protective sheeting should not be placed on the carpet that is being removed. Furniture that cannot be moved from the room should be covered with impermeable protective sheeting. Removal of an area rug generates less dust if done according to the guidance in the previous paragraph, so it can be handled as a low dust job. Always vacuum the floor after removing the carpet so leaded dust is not tracked to other parts of the dwelling. (The floors may be wet washed after vacuuming if they are made of a material that will not be damaged by large amounts of water on them; they should be vacuumed again after they are dry.)

Selecting a vacuum. Vacuum cleaners used for cleaning up dust as a lead hazard control measure must be high efficiency particulate air (HEPA) vacuums if the work is covered by OSHA's Lead in Construction rule, EPA's RRP Rule, or HUD's LSHR. (See Appendix 6, and, in particular, 29 CFR 1926.62(h)(4), 40 CFR 745.85(b)(2)(A) and (B), and 24 CFR 35.145 and 150(b), respectively.)

HEPA vacuums differ from conventional vacuums in that they contain high-efficiency filters that are capable of trapping extremely small, micron-sized particles. These filters can remove particles of 0.3 microns or greater from air at 99.97 percent efficiency or greater. (A micron is 1 millionth of a meter, or about 0.00004 of an inch.)

(Some vacuums are equipped with an ultra-low penetration air (ULPA) filter that is capable of filtering out particles of 0.13 microns or greater at 99.9995 percent efficiency. However, these ULPA filters are slightly more expensive, and may be less available than HEPA filters.)

The characteristics of a vacuum that are associated with effectiveness of cleaning carpets are:

- **Particle lifting velocity.** This appears to be a function of the design of the nozzle as well as the suction (static pressure in the nozzle). High suction alone does not predict efficient dust lead recovery. Vacuum velocity may be more important with shag carpets than with other types of pile. (Wang, 1995; Lewis, 2002; EPA, 1997c).
- **An effective agitator bar, or beater bar.** A power driven agitator helps dislodge dust particles and can significantly increase dust collection efficiency (Roberts, 1991; CMHC, 1992; Ewers, 1994; Lewis, 2002; EPA, 1997c; CH2MHILL, 1991).
- **Filters and/or bags that capture the dust particles.** HEPA filters are preferred from a technical perspective, in addition to being required by regulations in most cases (see above), because they are likely to catch very small particles that may include allergens as well as lead. However, recent research indicates that very little dust escapes through the exhaust of good-quality non-HEPA vacuums (EPA, 1995c; Rich, 2002; Yiin, 2002; California Department of Health Services, 2004). Also, some manufacturers of conventional vacuums offer filtration systems that capture smaller particles than do traditional systems. Therefore, if a HEPA vacuum is not required by regulation and is not available, a good-quality non-HEPA vacuum can be used effectively, especially if it is fitted with a "HEPA-type" or "Allergy" filter bag (EPA, 2000a).
- **Durability.** Removal of deep dust by vacuuming may take hours, depending on the size of the carpet and its condition. Continual, weekly vacuuming is advised to maintain a nonhazardous surface. Therefore, it is important to have a vacuum that will withstand frequent use and continue to be effective in dust collection.

One study concluded that a vacuum to be used for deep dust removal "should be a high quality, durable, traditional upright (with beater bar), two motor upright (with beater bar), or two motor canister (with powered head)" and that a HEPA filter is advisable (Lewis, 2002). Another researcher has found that a vacuum fitted with a dirt sensor is very useful. The sensor measures the amount of dust being picked up and shows when no more dust or dirt is being collected (Roberts, 1999; Roberts, 2004).

Duration of vacuuming. The vacuuming time required to remove enough deep dust from old carpets to assure that the surface lead loading will be reduced varies with the factors described above under "Deciding whether to clean or dispose of carpets." Reported times have varied from 2 to 85 minutes per square meter (10 sq. ft.) (Roberts, 2002). Intensive vacuuming is necessary to remove embedded dust from old carpets (see Table 11.5).

Table 11.5 Rug Cleaning Steps and Approximate Time Per 10 Square Feet.

Step	Description	Time/10 ft^2
1	HEPA vacuum pile side of rug with beater bar at a rate no faster than 1 minute for every 10 square feet.	60 seconds
2	Fold rug in half and HEPA vacuum bottom of rug without beater bar at a rate no faster than 1 minute per 10 square feet for traditional rugs, or normal speed for manufactured carpeting with plastic backing.	60 seconds for traditional rugs, or Approximately 10-30 seconds for manufactured carpeting with plastic backing.
3	HEPA vacuum bare floor and any padding (no rate restriction or beater bar).	Approximately 10–60 seconds
4	Fold other half of rug over and repeat steps 2 and 3 (no rate restriction and no beater bar).	Approximately 10–140 seconds
5	Fold rug back over so it is in its original position.	Approximately 10–30 seconds
6	HEPA vacuum top side of rug a final time with the beater bar. The rate is no faster than 2 minutes per 10 square feet.	120 seconds
	Total Approximate Time	**4.0–8.0 minutes**

Cleaning area rugs. If cleaning of area rugs is done onsite, the following steps are recommended:

- First, vacuum the pile side (the top side) with a vacuum equipped with a beater bar, or agitator attachment, on the vacuum head at a rate *no faster than* 1 minute for every 10 square feet.
- Fold the rug in half, exposing the backing of half of the rug. The backing of the rug should be vacuumed without using the beater bar attachment (City of Toronto, 1990) at a rate of 1 minute per 10 square feet.
- Vacuum the exposed pad under the rug, if present, at normal speed and fold back over the rug.
- Vacuum the exposed floor beneath the rug at normal speed, and unfold the pad and rug.
- Fold the rug in half again, exposing the backing of the other half of the carpet, and repeat the vacuuming of the bottom of the rug, the pad, and the floor underneath.
- Unfold the pad and rug.
- Vacuum the pile side of the rug again using the beater bar attachment. Vacuum at a rate no faster than 2 minutes per 10 square feet.

Consideration should be given to a final cleaning step consisting of a steam cleaning of the pile side of the rug. Steam cleaning can remove additional, but limited, amounts of lead from

rugs (CH2MHILL, 1991). This cleaning can be done by the contractor or owner using commercially available equipment. For multi-family buildings consideration should be given to the use of truck-mounted cleaning equipment since it may be significantly more powerful than typical rental equipment for residential use.

Cleaning wall-to-wall carpeting.
For cleaning wall-to-wall carpeting (see Figure 11.23), the following procedure is recommended:

Vacuum carpeting with a vacuum equipped with a beater bar or| agitator attachment on the vacuum head. The beater bar helps to dislodge embedded dust. The total vacuuming time recommended is at least 4 minutes per 10 square feet of carpeting (Ewers *et al*., 1994), divided into two segments of at least 2 minutes for each 10 square feet. The two vacuuming segments are performed in perpendicular directions. For example, the first segment may be done in an east-west direction, while the second is done in a north-south direction.

The provisions regarding steam cleaning and suitability of general all-purpose household cleaners discussed in Section V.B.1, above, apply to wall-to-wall carpeting.

Figure 11.23 Carpet with debris and after cleaning.

3. Cleaning Upholstered Furniture

The first step in dealing with upholstered furnishings is to determine if the item is going to be discarded or cleaned. It may be preferable to dispose of items that are in poor condition or known to be highly contaminated with lead.

The recommended dust removal procedure for upholstered furniture is vacuuming. Upholstery surfaces should be vacuumed with three to five passes over each surface at a total rate of 2 minutes per 10 square feet. Steam cleaning, and other wet cleaning procedures are generally not recommended because they may damage fabrics. However, newer steam cleaners have a water extraction feature to prevent water damage to fabric. If wet cleaning is desired, test a small section of the fabric for color fastness before cleaning the entire surface.

Cloth throw covers, slipcovers, or fitted vinyl covers should be provided for all cleaned, upholstered items. This is particularly important for items at the end of their useful lives that would not hold up well under an aggressive vacuuming. A cloth cover material that can be easily removed and washed should be selected.

4. Forced Air Systems and Drop Ceilings

If the ceilings or forced air systems contain leaded dust, they may present a hazard to maintenance or renovation workers who access them (City of Toronto, 1990).

Where possible, return and supply air vent registers that can be easily removed should be taken out, vacuumed, and wet cleaned (see Figure 11.24 and 11.25). If the vent registers are sealed to the wall or floor with paint, the edges should be misted and scored to help free the vent register with a minimum of leaded dust generation.

Air vent registers that cannot be easily removed should be vacuumed and wet cleaned in place. The horizontal surfaces in the ductwork that can be easily reached with the vacuum attachment should be cleaned. Water should not be poured down the air duct to clean the vent register; wiping with a damp sponge or mop is adequate. Take care not to cut hands on sharp metal in the vent.

Clean or replace the air filters on heating units and air conditioners with new filters at the time of dust removal. Used filters should be placed in plastic bags and sealed prior to disposal to minimize the potential spread of leaded dust.

Figure 11.24 Air vent before and after cleaning.

a. Vacuum and remove register covers;

b. Vacuum Accessible Parts of Duct Opening

c. Wet wash register covers and replace

Figure 11.25 Clean Air Vent Registers

Leaded dust in non-forced air systems and drop ceilings is not considered a hazard to residents unless major disturbances of the ducts or ceilings are planned, such as repairs or relocations of ducts. When major disturbances of any type of duct or ceiling work are anticipated, cleaning will probably be warranted. This includes instances when forced air systems have the direction of airflow reversed during maintenance.

5. Resident Protection

To facilitate dust removal work and provide protection for occupants, only workers and their supervisors should be in the work area during the dust removal process. This will also help ensure that work can be completed in 1 day. Worksite preparation for low dust jobs is usually adequate for dust removal unless lead-contaminated wall-to-wall carpets are being removed.

In addition, disposable or easily cleaned walk-off mats (door mats) should be placed at entryways to control the tracking of leaded dust into the dwelling (see Figure 11.26).

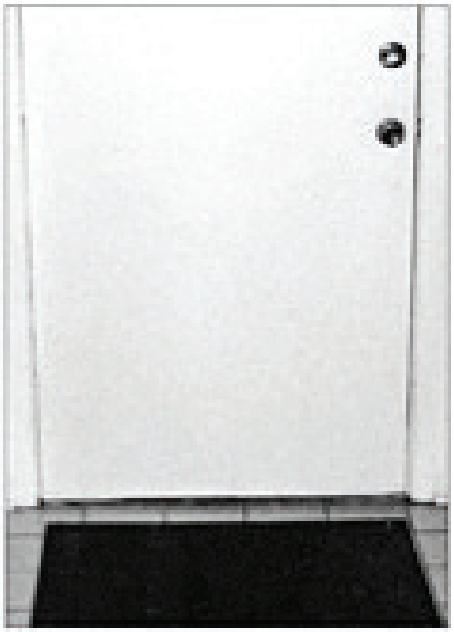

FIGURE 11.26 Walk-Off Mats

C. Follow-up to Dust Removal

If the clearance area may have had high lead levels before the work and/or has rough horizontal surfaces that may make clearance difficult, the owner or contractor may consider using a pre-clearance screen before calling the clearance examiner. See Section II.J, above, for additional information.

Lead-based paint inspectors, risk assessors, or sampling technicians performing clearance examinations should check to see that all visible dust, debris and residue have been removed from the dwelling before collecting dust samples. (See Chapter 15 for information on clearance.) The clearance dust sampling results will provide a means of checking that lead levels have been reduced by the dust removal work, and will serve as a baseline for comparison to future test results.

In addition to the standard EPA and HUD requirement to perform clearance on carpeted as well as uncarpeted floors, if area rugs have been cleaned as a lead hazard control measure, they, too, should be cleared in order to demonstrate the effectiveness of the cleaning.

Since it has been shown that lead-contaminated dust can re-accumulate on household surfaces following lead-based paint abatement and dust removal alone (Lanphear, 2000; Farfel and Chisolm, 1987b; Jacobs, 1992; Clark, 1993), ongoing lead-safe maintenance and professional reevaluation of the dwelling, resident education, and continued cleaning are important elements of a dust removal plan.

Educational materials prepared by State or local government agencies, or lead poisoning prevention organizations should explain the need for periodic wet cleaning of household surfaces, with particular attention to dust traps and reservoirs, and the importance of the r disposal of air conditioning and heating unit filters that are routinely cleaned or replaced by the residents. Some owners and municipalities provide cleaning kits to residents to encourage and support their ongoing dust removal efforts. (See Chapter 2 and Section I of this chapter for information on resident education.)

VI. Soil Interim Controls

How To Do It

1. **Plan Soil Interim Controls.**

   - Select appropriate soil interim controls, which may include soil alterations, soil surface coverings, land use controls, reduction of soil tracking, or drainage and dust controls.
   - Prepare a site plan of the yard, showing the soil lead hazard controls. Retain plans for use in ongoing monitoring.

2. **Contain and dampen dust.** Prepare worksite in accordance with guidance in Chapter 8. Use water to contain dust during the work, and clean play equipment.

3. **Establish soil alteration.** Impermanent surface coverings include grass (as seed or sod), other ground covers (e.g., ivy), artificial turf, bark, mulch, and gravel. If the area to be controlled is heavily traveled, impermanent surface coverings, such as grass, are not appropriate.

4. **Put soil surface coverings in place.**

   - If grass is selected, consult with the local agriculture extension service, or a reputable local nursery, to determine what grasses are appropriate for the locale, soil type, and sun/shade characteristics. Properly prepare the soil prior to seeding or sodding.
   - If mulch or bark is selected, apply the covering 4-6 inches deep (3 inches is more appropriate for gravel). New bark, gravel, or other materials should not contain more than 200 µg/g of lead, if possible, and never more than 400 µg/g.
   - If live ground covers (including grass) are selected, it is imperative that they are properly watered during the first 3 months and adequately maintained thereafter. Automatic sprinkler systems are appropriate for large properties.
   - If the soil is in a public recreation area, comply with Consumer Product Safety Commission standards on acceptable surface coverings in play areas.

5. **Install land use controls.** Land use controls include fencing, warning signs, changes in administrative practices, creation of alternative play areas (such as decking), and thorny bushes.

6. **Drainage and dust controls.** Control water erosion by proper grading to pitch the slope away from the building and installing drainage channels (drainage channels may need to be fenced or covered if they are accessible). Control wind erosion by periodic watering, windbreaks, or foot traffic controls.

7. **Reduce dust tracking.** Provide walk-off doormats at all entryways to reduce the tracking of contaminated dust and soil into the dwelling.

8. **Perform ongoing monitoring and maintenance.** Perform ongoing monitoring and maintenance of soil coverings and land use controls. If ongoing monitoring shows that bare soil remains, or reappears within 12 months of an interim soil control, the interim controls are not effective. Soil abatement should be conducted (see Chapter 12), unless other interim controls can be shown to be effective for the specific site.

9. **Reevaluation.** If required by regulation or the property owner or manager's preference, conduct reevaluations every two years in accordance with guidance in Section VII of Chapter 5.

A. Definition of Soil Lead Hazards

A soil lead hazard in residential property is bare soil that contains total lead equal to or exceeding:

- 400 parts per million (or µg/g) for play areas frequented by children under 6 years of age, or
- 1,200 parts per million (or µg/g) for other parts of the yard including the dripline/foundation area in non-play areas.

These values are from the federal lead hazard standards rule (at 40 CFR 745.65(c)). State and local standards may vary; if lower, they apply to the housing.

EPA does not provide for a *de minimis* area of bare soil outside the play area that can exceed the 1,200 µg/g standard, such as the 9 square feet per property that HUD had incorporated into its Lead Safe Housing Rule (24 CFR 35.1320(b)(2)(ii)(B)) issued 1½ years before the EPA issued the lead hazard standards rule. EPA noted that it had no analysis or data that relate the amount of bare soil to risk, and the incremental cost of including soil testing in a risk assessment is small. As noted in Chapter 5 of these *Guidelines*,

> "However, EPA highly recommends using the HUD Guidelines for risk assessment…. This would avoid declaring very small amounts of soil to be a hazard in the non-play areas of the yard. This would also help target resources by eliminating the need to evaluate soil or respond to contamination or hazards for properties where there is only a small amount of bare soil."

Once soil sampling establishes that a yard has soil lead hazards, it can be useful to create a map of soil lead concentrations in the yard, such as by using an XRF analyzer that is capable of direct measurement of soil lead concentrations (EPA, 2001a), or by soil sampling and analysis (see Chapter 5, Sections II.C and IV, respectively). This information can be useful for developing a customized interim control plan for the particular yard.

B. Temporary and Permanent Soil Treatments

Interim measures for controlling soil lead hazards include surface coverings with grass, gravel, mulch, wood chips, or similar materials, or land use controls, such as fences, thorny bushes, or decks, for preventing contact with the contaminated soil. These interim controls are designed to temporarily reduce exposure. How long they remain effective depends on many factors, including the durability and maintenance of the cover, amount or degree of foot traffic, and climate.

Soil abatement measures are described in Chapter 12, Section V. If the control measure consists of replacing soil that is a soil-lead hazard (see Section A, above) with soil of acceptable lead levels, or includes installing a permanent cover, such as asphalt or concrete, the method is classified as abatement.

C. Types of Interim Control Measures for Soil

Five types of measures may be used as part of an interim control plan for soil. They are:

- Measures that alter the contaminated soil.
- Measures that alter the surface cover.
- Land use controls.

- Measures that reduce soil tracking
- Measures to reduce offsite drainage or dispersal of the contaminated soil.

Each of these activities should be carried out in a manner that prevents further dispersal of the contamination and prevents the area undergoing the interim control treatment from being contaminated in the process. Work practices for soil interim controls are similar to those for soil abatement and are described more fully in Chapter 12, Section V.

1. Soil Alteration

Interim controls usually involve some alteration of the soil. Examples include surface cultivation, additives, or rototilling clean soil into existing soil to assist in establishing ground cover (e.g. grass, ivy). Grading of the soil is sometimes needed to assure proper drainage. Typically surface alteration is not effective enough to be used as the sole interim control measure. Tilling and mixing the soil to a depth of at least 8 inches may be effective. The addition of clean soils and compost can be used to reduce the lead concentration of vegetable garden soils that are only slightly above the recommended maximum 400 ppm lead concentration, however, for highly contaminated garden soils the contaminated soil should be removed and replaced with clean soil or the garden should be relocated.

2. Soil Surface Cover

The most common form of soil interim control is surface covering that creates a barrier between leaded soil and children. Typical materials include bark mulch, pea gravel, crushed stone, grass seeding, sod, other live ground covers (e.g., juniper, shrubs, ivies), and paving stones. Except with installations of grass seed or sod, a water permeable landscape fabric should always be used to create a barrier between the soil and the installed material. Landscape fabric controls for weeds, creates a clear barrier to leaded soil, and visually signals when the installed material needs to be replenished.

The choice of a covering for a particular area depends on the climate, expected use, planned maintenance, and aesthetic preferences. For aesthetic as well as practical reasons, a property owner may choose to improve the surface cover over an entire soil area even though only a portion is bare.

The success of grass and other live ground covers is dependent on proper planting, adequate water and sunlight, regular maintenance, and most importantly, the ability to control the use of the area. In high traffic areas use of grass as an interim control is unlikely to succeed. Where access to an area can be controlled, or where use is expected to be limited, grass and other live ground covers can be successful interim controls. Some ground covers, such as juniper bushes, can also effectively limit traffic through an area. Shade tolerant ground covers such as ivies are better suited than grass for areas that receive little sunlight.

Before using grass or live ground covers as an interim control measure, a property owner should consult with a lawn care professional about soil preparation, appropriate grasses and plants to use, and future maintenance requirements. The county cooperative extension service or a reputable local nursery may be contacted for advice on types of grass or other ground cover to be used in specific geographic areas and for specific soil types, slope, and sunlight conditions. Table 11.6 offers a brief summary of grass types and their suggested uses.

The local office of the U.S. Department of Agriculture's Natural Resources Conservation Service (***http://www.nrcs.usda.gov/wps/portal/nrcs/main/national/home***) may also be able to provide advice about soil conditions in a specific geographic area. An owner of a large property may consider installing a sprinkler system to improve the maintenance effort. In any event some type of hose and sprinkler system should be made available.

An owner should consider whether sod or seeding is more appropriate when planting grass. Both grass seed and sod require restrictions on foot traffic until root systems and stems become established. Newly laid sod requires at least 2 weeks, while grass seed requires 1 to 2 months (Lane Publishing, 1989; Maryland Cooperative Extension, 1994). Sod can be laid during most of the year (as long as the ground is not frozen) and requires less initial care. However, sod is more expensive than seeding and is less likely to develop the deep root systems that will allow the grass to withstand regular wear and tear. It is best to lay sod during the growing season.

At least 3–4 inches of bark, mulch, wood chips or gravel are recommended to serve as a temporary ground covering (see Figure 11.18). If the covering is more than 3 inches thick, water will not reach plantings that may be in the area. Four inches is recommended for play areas. This level of material can be achieved by constructing a raised bed framed with 2" x 6" ACQ (alkaline copper quaternary) pressure-treated lumber. ACQ-treated lumber (or newer composite/non-wood materials) contains no EPA-listed hazardous compounds, whereas chemicals used in traditional pressure-treated lumber include compounds of, in addition to, copper, chromium and arsenic (commonly referred to as CCA-treated lumber), which may leach into the environment. Rock or other edging material may be used instead of lumber, depending on site specific conditions.

Do not use mulch made from recycled building components unless it has been tested and found to contain less than 400 µg/g of lead. EPA requires that replacement soil used in soil abatement contain less than 400 µg/g of lead. If possible, replacement bark, mulch, wood chips, and added soil should contain no more than 200 µg/g of lead, in order to provide a further safety factor.

Bark or other suitable soft material should be used as surface cover for contaminated soil near play equipment. This will offer a degree of protection from injuries that may result from falling. Consumer Product and Safety Commission regulations dealing with acceptable surface coverings in play areas may apply to public areas (CPSC, 1991). Artificial turf can also be used, but may cause drainage problems if it is not permeable.

Rubber cushioning specifically designed for playgrounds can also be used to cover contaminated, bare soil in play areas.

3. Raised Beds and Other Landscaping Options

The installation of raised beds can be an effective control measure in areas with high soil lead levels where grass would not be expected to grow well. They are often well suited for use in the drip zones of homes (i.e., the area extending approximately 3 ft. from the foundation). The beds can be created using 2" x 6" ACQ pressure-treated lumber, using landscape fabric to cover the ground followed by the application of top soil and mulch if the beds will be planted. If the beds are not planted, mulch, woodchips, or gravel can be placed directly over the landscape fabric.

A cost-effective approach to treat bare foot paths is to place stone or concrete stepping stones along the pathway and cover surrounding bare soils with a layer of gravel or mulch.
An option for play areas and picnic areas with contaminated bare soils is to create raised wooden platforms using ACQ pressure-treated lumber. This may be especially appropriate for small yards where relocation of such activities within the yard area is not possible.

4. Land Use Controls

Altering the use pattern of the yard is another common way to control human exposure to bare, contaminated soil. Measures include: fencing, to create a barrier to contaminated soil; planting thorny or dense bushes (see Figure 11.27) to discourage access; decks with lattice added below to restrict access to soil under the deck; relocating play areas to move a play area away from old painted structures, such as a fence or shed, and away from areas with high soil lead levels; warning signs; and educational efforts.

Preventing access to the bare, contaminated soil by fencing is most effective if other entrances and exits to the housing units can be maintained for use by residents, guests, commercial vehicles, and emergency vehicles (see Figure 11.28). Fencing may also be used to reduce exposure during a delay in the implementation of other interim control measures or soil abatement.

Educational efforts directed towards decreasing use of bare, lead-contaminated areas; avoiding eating or drinking in these areas; and frequent washing of hands may serve to reduce ingestion of the contaminated soil. The decision on whether to plant grass or erect barriers should be site-specific. Consideration should be given to the availability of alternative play areas, the location of contaminated soil with respect to entrances or exits, the likelihood that leaded dust may be tracked onto sidewalks or directly into the housing unit, the degree of supervision available, and local preferences.

FIGURE 11.27 Thorny Bushes as a Land Use Control

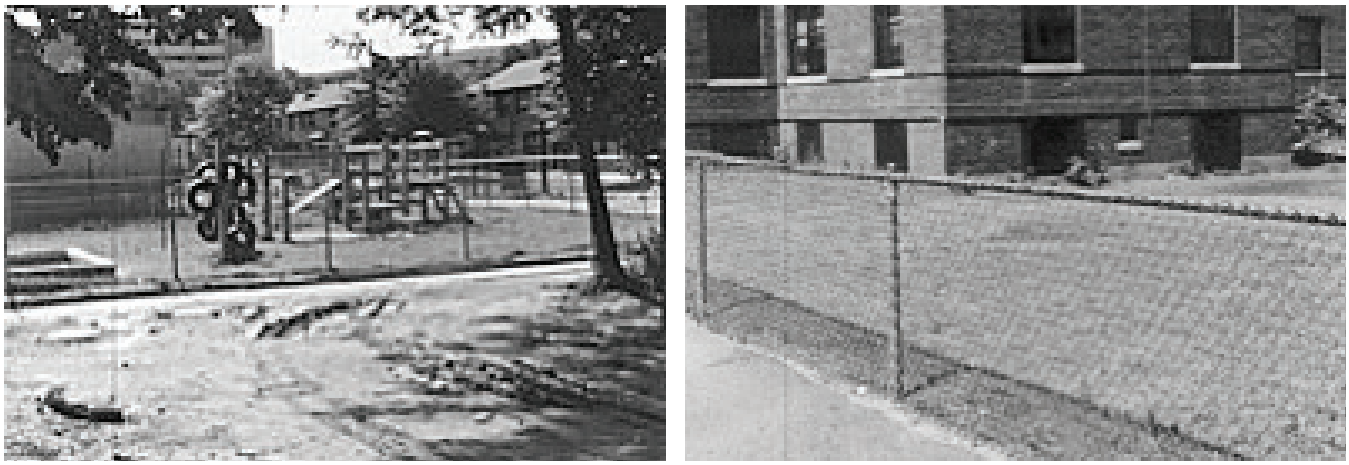

FIGURE 11.28 Using Fencing as an Interim Control. a) For Bare Soil. b) For other soil.

Table 11.6 Grasses and Their Appropriate Applications.

Grasses That Grow From Seeds	Texture	Climate	Durability
Bahia grass	Coarse	Warm	Excellent
Colonial Bent grass	Fine	Cool	—
Creeping Bent grass	Fine	Cool	—
Common Bermuda grass	Medium to Fine	Warm	Excellent
Kentucky Bluegrass	Fine	Cool	—
Rough Stalk Bluegrass	Fine	Cool	—
Centipede grass	Medium to Fine	Warm	—
Dichondra	Coarse	Warm	—
Chewings Fescue	Fine	Cool	Poor
Creeping Red Fescue	Fine	Cool	Poor
Hard Fescue	Fine	Cool	—
Tall Fescue	Coarse	Cool	Moderate to Excellent
Annual Ryegrass	Coarse	Cool	—
Perennial Ryegrass	Fine	Cool	Excellent
Grasses That Grow From Sod	**Texture**	**Climate**	**Durability**
Bahia grass	Coarse	Warm	Excellent
Hybrid Bermuda grass	Fine	Warm	Excellent
Kentucky Bluegrass	Fine	Cool	—
Centipede grass	Medium to Fine	Warm	Poor
Dichondra	Coarse	Warm	—
Tall Fescue	Coarse	Cool	—
Seashore Paspalum	Medium	Warm	—
Perennial Ryegrass	Fine	Cool	Excellent
St. Augustine grass	Coarse	Warm	—
Zoysia grass	Fine	Warm	Excellent

5. Reduction of Soil Tracking into Dwellings

Doormats can be used to minimize the entry of soil lead into the house. Doormats should be placed on the exterior and immediate interior of the entry doors. Mats should be cleaned by machine washing, or other wet methods, not by beating or sweeping. (See Section V of this chapter for further information.)

Removing shoes at the doorway also greatly minimizes the amount of leaded soil and dust tracked into the house.

6. Drainage and Dust Controls

Drainage controls may involve directing water flow away from the contaminated areas by alterations in adjacent grades and/or installation of drainage channels. Drainage channels that receive runoff from bare, contaminated soil areas may need to be fenced to reduce access. Dust generation can be reduced by periodic watering, the creation of windbreaks, or foot-traffic controls.

D. Making a Plan

It is recommended that a site plan of the yard be drawn to aid in planning soil lead hazard controls, and to serve as a documentation of the type and location of controls for future reference. The hazard control plan should be based on the nature and extent of hazards, yard use, topography, cost, future maintenance considerations, and property owner preference. In most situations, there is a range of acceptable treatments. Decisions are usually site specific. Working with a qualified landscaping professional to develop standards, details, and bid documents is recommended.

Often owners will be partial to certain types of soil lead hazard treatments (e.g. grass, gravel, mulch, fencing). Owners' preferences need to be balanced with lead levels, yard uses, and budget when selecting treatment methods. For example, an owner may want a lawn but grass treatments can be difficult to sustain in an urban yard due to excessive shade, compacted soil, or lack of watering by an owner. Property owner involvement in decision making will help motivate owners to maintain lead hazard control measures over time. Some important questions to ask during planning are:

- How highly contaminated is the soil?
- How is the yard used? Play, gardening, pets, picnicking, parking?
- Does the yard have primarily sunny or shady conditions?
- Are the plants selected appropriate to the yard conditions and region of the country?
- What is the budget for the project?
- Who will maintain the yard improvements after the work is completed?

E. Guidance on Specifications for Interim Controls of Soil Lead Hazards

Appendix 7.4 includes suggested language that may be helpful in drafting specifications for methods and products used in interim controls of soil lead hazards is provided below, and notes to specification developers.

Specification developers may adapt the specification language as needed to fit each particular site and each plan or design. Landscape contractors may be unfamiliar with the issue of lead in soil. Their standard practices may not be in line with lead-safe treatment methods. It is advisable to work closely with contractors on their first few lead-safe jobs to ensure that they are clear on how to properly implement interim controls. If abatement of soil lead hazards is planned, specifications should be written by a person certified in accordance with regulations of EPA or an EPA-authorized state, tribe or territory.

F. Monitoring and Maintaining Soil Interim Controls

If grass or sod is planted, or if bark, gravel, or other similar covering is used, it should be monitored visually. The monitoring should occur frequently immediately after installation and can be reduced thereafter. If ongoing monitoring shows that bare soil remains or reappears within 12 months of an interim soil control, the selected interim control is not effective. Soil abatement should be conducted (see Chapter 12), unless other interim controls can be shown to be effective for the specific site.

References

Banov, 1978. Banov, A., *Paints and Coatings Handbook,* Structures Publishing Company, Farmington, Michigan.

Brown, 1982. Brown, E, *Fundamentals of Carpet Maintenance: An Introduction Carpet Cleaning Technology,* Leeds, W. Yorkshire: P.A. Brown & Assoc.

California Department of Health Services, 2004. Public Health Institute for California Department of Health Services, Childhood Lead Poisoning Prevention Branch and Environmental Health Laboratory Branch, "Evaluation of Household Vacuum Cleaners in the Removal of Settled Lead Dust from Hard Surface Floors," Final Report to U.S. Department of Housing and Urban Development, 2004.

Cassens and Feist, 1991. Cassens, D.L., and W.C. Feist, *Exterior Wood in the South [also Northeast, Northwest, etc.], Selection, Applications and Finishes,* Technical Report FPL–GTR–69, U.S. Department of Agriculture, Forest Products Laboratory, Madison, Wisconsin, May 1991.

CH2MHILL, 1991. CH2MHILL, *Final House Dust Remediation Report for the Bunker Hill CERCLA Site Population Area RI/FS,* Boise, ID, Idaho Department of Health and Welfare, editor and sponsor. BHPA-HDR-F-RO-052091. See Summary And Assessment Of Published Information On Determining Lead Exposures And Mitigating Lead Hazards Associated With Dust And Soil In Residential Carpets, Furniture, And Forced Air Ducts, EPA 747-S-97-001 available at ***www.epa.gov/lead/pubs/ls_final.pdf***.

City of Toronto, 1990. City of Toronto Department of Public Health in conjunction with Ontario Ministry of the Environment, *Lead Reduction Program House Dust Cleaning: Final Report,* Concord Scientific Corporation and Gore & Storrie Limited in association with South Riverdale Community Health Centre, Toronto, Montreal, Canada.

Clark, 1993. Clark, C.S., R.L. Bornschein, J. Grote, W. Menrath, W. Pan, S. Roda, and P. Succop. *Cincinnati Soil Lead Abatement Demonstration Project Final Report,* August 1993.

Clark, 2002. Clark, C.S., "Development of a Rapid On-Site Method for the Analysis of Dust Wipes Using Field Portable X-Ray Fluorescence," prepared for the U.S. Department of Housing and Urban Development, January 2002.

CMHC, 1992. Canada Mortgage and Housing Corporation, Saskatchewan Research Council Report, *Effectiveness of Cleanup Techniques for Leaded Paint Dust,* Saskatoon, Saskatchewan, Canada (also see Figley, 1994).

CPSC, 1991. Consumer Product Safety Commission, *Handbook for Public Playground Safety, Recommendations for Surfacing Materials,* Washington, DC, 1991. Updated 2008. ***www.cpsc.gov/cpscpub/pubs/325.pdf***

EPA, 1992a. U.S. Environmental Protection Agency, *Training Course for Lead-Based Paint Abatement Project Supervisors,* Washington, DC.

EPA, 1995c. U.S. Environmental Protection Agency, *Lead-Based Paint Abatement and Repair and Maintenance Study in Baltimore: Pre-Intervention Findings,* EPA 747-R-95-012. ***www.epa.gov/lead/pubs/r95-012.pdf***

EPA, 1997a. U.S. Environmental Protection Agency, *Laboratory Study of Lead-Cleaning Efficacy,* March 1997 (EPA 747-R-97-002). Accessed from ***nepis.epa.gov*** by searching for 747R97002.

EPA, 1997c. U.S. Environmental Protection Agency, *Summary and Assessment of Published Information on Determining Lead Exposures and Mitigating Lead Hazards Associated With Dust and Soil in Residential Carpets, Furniture and Forced Air Ducts,* December 1997 (EPA 747-S-97-001). Accessed from ***nepis.epa.gov*** by searching for 747S97001.

EPA, 1998. U.S. Environmental Protection Agency, *Lead-Cleaning Efficacy Follow-Up Study,* October 1998 (EPA 747-R-98-008).

EPA, 2000a. U.S. Environmental Protection Agency, *Basis for Educational Recommendations on Reducing Childhood Lead Exposure,* June 2000 (EPA 747-R-00-001). ***www.epa.gov/lead/pubs/reduc_pb.pdf***

EPA, 2000x. U.S. Environmental Protection Agency, "Regulatory Status of Waste Generated by Contractors and Residents from Lead-Based Paint Activities Conducted in Households," Memorandum signed July 31, 2000. See ***www.epa.gov/lead/pubs/fslbp.htm***. Accessed 5/3/2006; this site may be moved or deleted later.

EPA, 2001a. U.S. Environmental Protection Agency, *Lead safe Yards: Developing and Implementing a Monitoring, Assessment, and Outreach Program for Your Community,* EPA. National Risk Management Laboratory, Office of Research and Development, Cincinnati, Ohio, January 2001 (EPA/625/R-00/012). ***http://www.epa.gov/region1/leadsafe/tool2.html***

EPA, 2001y. "Mold Remediation in Schools and Commercial Buildings", EPA 402-K-01-001, March 2001. Available in pdf at ***www.epa.gov/mold/moldresources.html***, and may be ordered from:

- EPA National Service Center for Environmental Publications (NSCEP) (***www.epa.gov/ncepihom/).*** Publication requests can also be mailed, called or faxed directly to: EPA National Center for Environmental Publications (NSCEP), P.O. Box 42419, Cincinnati, OH 42419, (800) 490-9198, (513) 489-8695 (fax); or
- IAQ INFO, P.O. Box 37133, Washington, DC 20013-7133, (800) 438-4318, (703) 356-4020, (fax) (703) 356-5386, ***iaqinfo@aol.com***.

EPA, 2002a. U.S. Environmental Protection Agency, "Questions & Answers About ETV Reports on Portable Technologies for Measuring Lead in Dust," December 2002.

EPA, 2002b. U.S. Environmental Protection Agency, The Environmental Technology Verification Program (ETV), Verification Statements EPA-VS-SCM-50, 51, 52, 53 and 54. Prepared by Oak Ridge National Laboratory, Oak Ridge, Tennessee, August 2002.

EPA, 2002c. U.S. Environmental Protection Agency, "A Brief Guide to Mold, Moisture, and Your Home," (EPA 402-K-02-003). Available at ***www.epa.gov/mold/moldresources.html***.

EPA, 2003w. U.S. Environmental Protection Agency, Criteria for Classification of Solid Waste Disposal Facilities and Practices and Criteria for Municipal Solid Waste Landfills: Disposal of Residential Lead-Based Paint Waste, Final Rule, Federal Register 68(117) 36487-36495: June 18, 2003. Accessed 10/10/2010 through ***http://origin.www.gpoaccess.gov/fr***.

EPA, 2003x. "A Brief Guide to Mold, Moisture, and Your Home," EPA 402-K-02-003, 2003. Available in pdf format at ***www.epa.gov/mold/moldresources.html***, also see EPA 2001y.

Ewers, 1994. Ewers, L., S. Clark, W. Menrath, P. Succop, and R. Bornschein, "Cleanup of Lead in Household Carpet and Floor Dust," *Journal of the American Industrial Hygiene Association,* 55(7): 650-7.

Farfel and Chisolm, 1987a. Farfel, M., and J.J. Chisolm, Jr., "Comparison of Traditional and Alternative Residential Lead Paint Removal Methods," in *Proceedings of the 6th International Conference on Heavy Metals in the Environment (Volume II)*, eds. S.E. Lindberg and T.C. Hutchinson, New Orleans, Louisiana, September 1987, pp. 212—214.

Farfel and Chisolm, 1987b. Farfel, M., and J.J. Chisolm, Jr., *Reducing Hazards From the Abatement of Lead Paint: Part 1—Pilot Demonstration and Evaluation of Alternative Abatement Practices,* Baltimore Integrated Environmental Management Project Phase II Report, Regulatory Integration Division, Office of Policy Analysis, Office of Policy, Planning, and Evaluation, U.S. Environmental Protection Agency.

Figley, 1994. Figley, D., and Makohon, J., "Effectiveness of Clean-Up Techniques for Leaded Paint Dust," Saskatoon, Saskatchewan: Saskatchewan Research Council, revised report SRC I-4800-38-C-92 to Canada Mortgage and Housing Corporation (originally published in 1992).

Jacobs, 1992. Testimony of D.E. Jacobs at the Hearings Before the Subcommittee on Housing and Community Development of the Committee on Banking, Part 2, S/N 102–108, U.S. House of Representatives, April 2, 7, and 29, 1992, pp. E832–842.

Lane Publishing, 1989. *Sunset Lawns and Ground Covers,* Menlo Park, California.

Lanphear, 2000. Lanphear, B.P., Eberly, S., Howard, C.S., "Long-Term Effect of Dust Control on Blood Lead Concentrations. *Pediatrics*, 106: 48e-48. ***http://pediatrics.aappublications.org/content/106/4/e48.full***

Lewis, 2002. Lewis, R.D., "The Removal of Lead-Contaminated House Dust from Carpets and Upholstery, Final Report," prepared for U.S. Department of Housing and Urban Development, Office of Healthy Homes and Lead Hazard Control, January 2002.

Lewis, 2006. Roger D. Lewis, Sridhar Condoor, Joe Batek, Kee Hean Ong, Denis Backer, David Sterling, Jeff Siria, John J. Chen, and Peter Ashley, "Removal of Lead Contaminated Dusts from Hard Surfaces," *Environ. Sci. Technol.,* 40, 590 -594, 2006. ***http://pubs.acs.org/doi/abs/10.1021/es050803s***.

Maryland Cooperative Extension, 1994. Lawn Care Ruler, FS-637R.

Milar, 1982. Milar, C.R. and P. Mushak, "Contaminated House Dust: Hazard, Measurement and Decontamination," in *Lead Absorption in Children: Management, Clinical, and Environmental Aspects,* eds., J.J. Chisolm and D.M. O'Hara, Urban & Schwarzenberg, Baltimore/Munich, pp. 143–152.

NCHH, 2004. National Center for Healthy Housing, and University of Cincinnati Department of Environmental Health, *Evaluation of the HUD Lead-Based Paint Hazard Control Grant Program: Final Report,* prepared for the U.S. Department of Housing and Urban Development, Washington, DC, May 1, 2004.

Rich, 2002. Rich, David Q., G.G. Rhoads, L. Yiin, J. Zhang, Z. Bai, J.L. Adgate, P.J. Ashley and P.L. Lioy, "Comparison of Home Lead Dust Reduction Techniques on Hard Surfaces: The New Jersey Assessment of Cleaning Techniques Trial," *Environmental Health Perspectives, 110(9):* 889-893, September 2002. ***http://www.ncbi.nlm.nih.gov/pmc/articles/PMC1240988/***; doi:10.1289/ehp.02110889

Roberts, 1991. Roberts, J.W., D.E. Camann, and T.M. Spittler, "Reducing Lead Exposure From Remodeling and Soil Track-In in Older Homes," in *Proceedings of the Annual Meeting of Air and Waste Management Association,* Paper No. 91–134.2, Vancouver, British Columbia, Canada.

Roberts, 1999. Roberts, J.W., W.S. Clifford, G. Glass, and P.G. Hummer, "Reducing Dust, Lead and Dust Mites, Bacteria and Fungi in Carpets by Vacuuming," *Archives of Environmental Contamination and Toxicology, 36:* 477-484.

Roberts, 2002. Roberts, J.W., Letter from John W. Roberts to Jackson L. Anderson, National Center for Healthy Housing, September 27, 2002.

Roberts, 2004. Roberts, J.W., Glass, G, and Mickelson, L., "A Pilot Study of the Measurement and Control of Deep Dust, Surface Dust, and lead in 10 Old Carpets using the 3-Spot Test While Vacuuming," *Archives of Environmental Contamination and Toxicology*, 48: 16-23.

Tohn, 2000. Tohn, E.R., S.L. Dixon, D. Rupp and C.S. Clark, "A Pilot Study Examining Changes in Dust Lead Loadings on Walls and Ceilings After Lead Hazard Control Interventions," *Environmental Health Perspectives, 105(5):* 453-456. ***http://ehp03.niehs.nih.gov/article/info%3Adoi%2F10.1289%2Fehp.00108453***; doi:10.1289/ehp.00108453

Tohn, 2003. Tohn, E.R., S.L. Dixon, W.A. Galke and C.S. Clark, "An Evaluation of One-Time Professional Cleaning in Homes With Lead-Based Paint Hazards," *Journal of Applied and Occupational Hygiene, 18(2):* 138-143.

Wang, 1995. Wang, E., G.G. Rhoads, T. Wainman and P.J. Lioy, "Effects of Environmental and Carpet Variables on Vacuum Sampler Collection Efficiency," *Applied Occupational Environmental Hygiene, 10(2):* 111-119.

Yiin, 2002. Yiin, Lih-Ming, F.F. Rhoads, D.Q. Rich, J. Zhang, Z. Bai, J.L. Adgate, P.J. Ashley and P.J. Lioy, "Comparison of Techniques to Reduce Residential Lead Dust on Carpet and Upholstery: The New Jersey Assessment of Cleaning Techniques Trial," *Environmental Health Perspectives, 110(12):* 1-5. ***http://ehp03.niehs.nih.gov/article/fetchArticle.action?articleURI=info%3Adoi%2F10.1289%2Fehp.021101233***