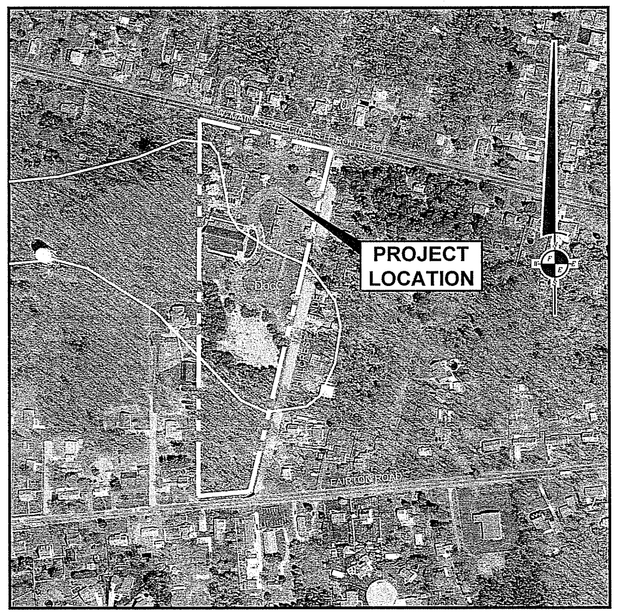

SOILS SURVEY MAP

SCALE : 1"=300'
PART OF THE U.S.D.A. WEB SOIL SURVEY

SOIL TYPE PRESENT IN WORK AREA:
DocC: DOWNER LOAMY SAND, 5 TO 10 PERCENT SLOPES

NATIONAL WETLANDS INVENTORY MAP

SCALE : 1"= 300'±
PART OF THE U.S. FISH AND WILDLIFE SERVICE
NATIONAL WETLANDS INVENTORY

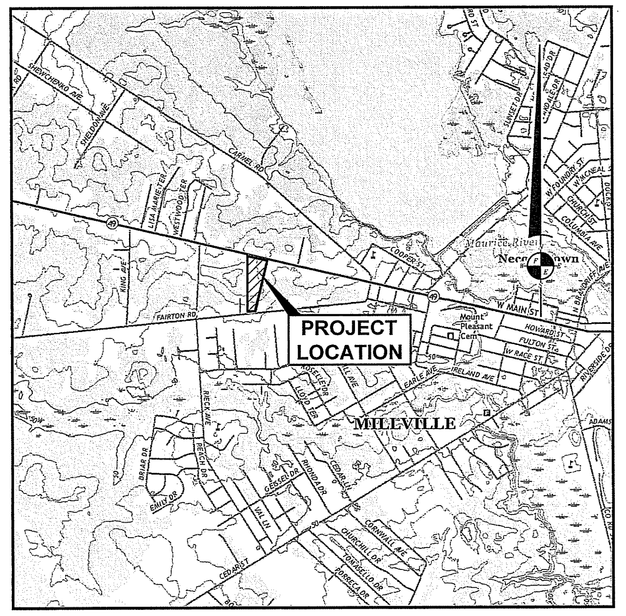

U.S. GEOLOGICAL SURVEY MAP

SCALE : 1"= 2,000'
PART OF THE U.S.C.&G.S.
MILLVILLE, N.J. QUADRANGLE

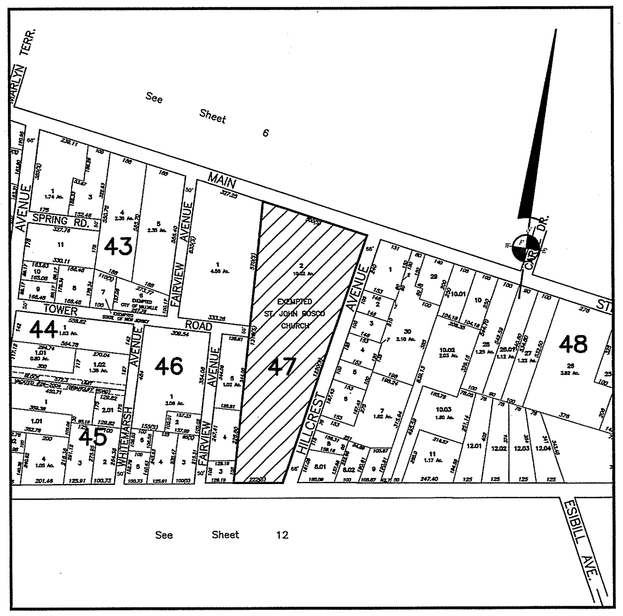

TAX MAP

SCALE : 1"=400'±
PART OF THE CITY OF MILLVILLE TAX MAP
SHEET NUMBER 9

SITE PLAN
FOR
HENDRICKS HOUSE GROUP
City of Millville
Cumberland County, New Jersey

GENERAL NOTES

1. TAX MAP REFERENCE:
   SHEET 9
   BLOCK 47
   LOT 2
2. DEED REFERENCE:
   BOOK 4077
   PAGE 1005
   DATE 12-02-2010
3. TOTAL LOT AREA: 412,328 S.F. (9.466 ACRES)
4. OWNER:
   PARISH OF ALL SAINTS
   621 DOCK STREET
   MILLVILLE, NJ 08332
5. APPLICANT:
   HENDRICKS HOUSE, INC.
   542 N. WEST BOULEVARD
   VINELAND, NJ 08360
6. ON-SITE BENCHMARKS:
   NAIL SET IN UTILITY POLE #B-47729
   ELEV. = 78.72 (NAVD '88 DATUM)
   NAIL SET IN UTILITY POLE #B-51585
   ELEV. = 82.92 (NAVD '88 DATUM)
7. BOUNDARY AND TOPOGRAPHIC SURVEY PERFORMED BY FRALINGER ENGINEERING, PA, BETWEEN MAY 6 AND MAY 7, 2020.

ZONE SCHEDULE

ZONE: R-15 (RESIDENTIAL)

STANDARD	EXISTING	PROPOSED
MIN. LOT AREA	412,328 S.F.	412,328 S.F.
MIN. LOT FRONTAGE	183.01' (FAIRTON ROAD) 475.45' (W. MAIN STREET) 1,229.08' (HILLCREST AVENUE)	183.01' (FAIRTON ROAD) 475.45' (W. MAIN STREET) 1,229.08' (HILLCREST AVENUE)
MIN. LOT DEPTH	183.01'	183.01'
MIN. SETBACKS: FRONT SIDE REAR	 146.5' (W. MAIN STREET)' 18.6' 18.6'	 146.5' (W. MAIN STREET)' 18.6' 18.6'
MAX. BUILDING HEIGHT	37'	37'
MAX. LOT COVERAGE	26.4%	24.1%
PARKING REQUIREMENT	NO VISIBLE STRIPING	136 TOTAL SPACES PROVIDED
ADA HANDICAPPED REGULATIONS	4 HANDICAPPED ACCESSIBLE SPACES	101-150 TOTAL SPACES PROVIDED 5 HANDICAPPED ACCESSIBLE SPACES REQUIRED (1 REQUIRED TO BE VAN ACCESSIBLE) 5 TOTAL SPACES OVERALL (5 VAN ACCESSIBLE)
SIGNAGE: WALL FREESTANDING	 NONE PRESENT 10'-10" WIDE x 5' HIGH, 6'-8" FROM GRADE TO TOP OF SIGN	 20 S.F. OR LESS (LOCATED ON FRONT WALL) EXISTING FREESTANDING SIGN TO REMAIN 4 - 2' HIGH x 2' WIDE (4 S.F. EACH) ENTRY WALL SIGNS

PROPERTY OWNERS WITHIN 200' OF SITE

PROPERTY ID	PROPERTY LOCATION	CLASS	OWNERS NAME & ADDRESS
32 71	1322 MAIN ST W	2	STONE, MICHAEL & BEATRICE 1322 W MAIN STREET MILLVILLE, N J 08332
32 72	1328 MAIN ST W	2	DASTOLFO, ALBERT J & NENETH 1328 W MAIN ST MILLVILLE NJ 08332
32 73	1404 MAIN ST W	2	MORRIS, STEVEN & TAMMY 1404 W MAIN STREET MILLVILLE NJ 08332
32 74	1406 MAIN ST W	2	PORRECA, PAUL R JR 2439 W MAIN ST MILLVILLE, N J 08332
32 75	1412 MAIN ST W	2	MOONEYHAM, JEFFREY C & LINDA K LEE 1412 W MAIN ST MILLVILLE N J 08332
32 76	1414 MAIN ST W	2	KESSLER, JASON 1414 W MAIN ST MILLVILLE NJ 08332
32 77	1418 MAIN ST W	2	JONES, PEARL M 1418 W MAIN ST MILLVILLE NJ 08332
32 78	1422 MAIN ST W GERALD/V	2	HEICHEL, GERALD & REGINA 1422 W MAIN STREET MILLVILLE N J 08332
32 79	1426 MAIN ST W	2	BARNES, TERRY 1426 W MAIN ST MILLVILLE, NJ 08332
32 80	1430 MAIN ST W	2	FLOWNAN, CAROLE 118 E VINE ST MILLVILLE NJ 08332
46 1	FAIRTON RD	1	TUMBLE PARTNERSHIP LLP 11 TAYLOR RD EDISON NJ 08817
46 2	120 FAIRVIEW AVE	2	DJAKOW, NICOLAU & MARY D 120 FAIRVIEW AVENUE MILLVILLE, N J 08332
46 3	1418 FAIRTON RD	2	GALLAHER, ROBERT S JR & KATHLEEN 26 S BETHEL RD MILLVILLE NJ 08332
47 1	MAIN ST W	1	TUMBLE PARTNERSHIP, LLC 11 TAYLOR RD EDISON, NJ 08817
47 2	2 HILLCREST AVE	15D	THE PARISH OF ALL SAINTS 621 DOCK ST MILLVILLE, N J 08332
47 3	1410 FAIRTON RD V/HOWARD	2	TOMLIN, HOWARD C. & DORIS A. 1410 FAIRTON ROAD MILLVILLE, N J 08332
47 4	121 FAIRVIEW AVE SLS/CARNERINE	2	VASTARDIS, HELEN STALS & DOROSHUK,C 121 FAIRVIEW AVE MILLVILLE NJ 08332
47 5	125 FAIRVIEW AVE	2	DOROSHUK, DANIEL 125 FAIRVIEW AVE MILLVILLE NJ 08332

PROPERTY ID	PROPERTY LOCATION	CLASS	OWNERS NAME & ADDRESS
48 1	7 HILLCREST AVE	2	HICKMAN, CARL A. & ALLISON 7 HILLCREST AVENUE MILLVILLE N J 08332
48 2	15 HILLCREST AVE	2	BAEZ, KIMBERLY 15 HILLCREST AVE MILLVILLE NJ 08332
48 3	19 HILLCREST AVE	2	LAWN, MARC A. & CATHY J. 19 HILLCREST AVE MILLVILLE NJ 08332
48 4	23 HILLCREST AVE	2	COOPER, ALETA K 23 HILLCREST AVE MILLVILLE, N J 08332
48 5	101 HILLCREST AVE	2	NAGRO, SCOTT T & MICHAEL K 101 HILLCREST AVE MILLVILLE NJ 08332
48 6	105 HILLCREST AVE	2	BURLEW, JAMES & CHRISTINA KING- 105 HILLCREST AVE MILLVILLE NJ 08332
48 7	HILLCREST AVE	1	TUSO, FRANKLIN J & KIMBERLY D 14 WILDWOOD AVE MILLVILLE NJ 08332
48 8	117 HILLCREST AVE	2	ELLIOTT, RONALD I & JUDY 117 HILLCREST AVE MILLVILLE, NJ 08332
48 8.01	1346 FAIRTON RD	2	ELLIOTT, ANTHONY E SR & CHERYL M 1346 FAIRTON RD MILLVILLE NJ 08332
65 17	1409 FAIRTON RD	2	WALKER, BRIAN 1409 FAIRTON RD MILLVILLE NJ 08332
65 25	1415 FAIRTON RD	2	GANDY, JAMES SR & JOYCE 1415 FAIRTON RD MILLVILLE NJ 08332
65 26	1405 FAIRTON RD	2	WHITE, THOMAS & MARIA GANGEMI 1405 FAIRTON RD. MILLVILLE, NJ 08332
65 27	1401 FAIRTON RD	2	LUPPERGER, LAWRENCE & JANICE 1401 FAIRTON ROAD MILLVILLE, N J 08332
65 28	1347 FAIRTON RD	15D	SLAVIC PENTECOSTAL CHURCH 1347 FAIRTON RD MILLVILLE N J 08332
65 29	1345 FAIRTON RD	2	BARTON, STANLEY J JR 1345 FAIRTON ROAD MILLVILLE, NJ 08332

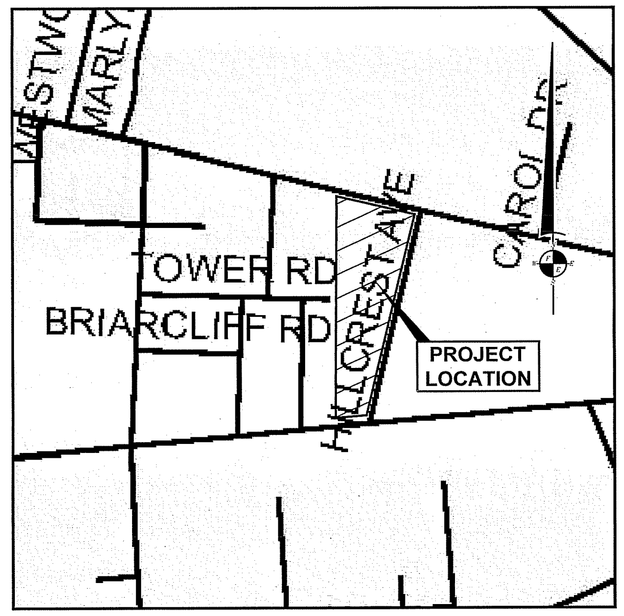

ZONE MAP

SCALE : 1"=500'±
PART OF THE CITY OF MILLVILLE ZONING MAP
DATED: NOVEMBER, 2015

SHEET INDEX

SHEET	DESCRIPTION
SP-1	COVER SHEET
SP-2	BOUNDARY AND TOPOGRAPHIC SURVEY
SP-3	DEMOLITION AND SITE PLAN
SP-4	GRADING AND SOIL EROSION AND SEDIMENT CONTROL PLAN

ONLY COPIES FROM THE ORIGINAL MAP OF THIS PLAT, CLEARLY MARKED WITH THE APPROPRIATE PROFESSIONAL'S EMBOSSED SEAL, SHALL BE CONSIDERED TO BE VALID COPIES.

THIS PLAT HAS BEEN PREPARED WITHOUT THE BENEFIT OF A TITLE REPORT. THIS CORPORATION AND/OR ITS EMPLOYEES ARE NOT LIABLE FOR ERRORS OR OMISSIONS RESULTING FROM THIS CONDITION.

THIS PLAT DOES NOT SHOW OR INTEND TO SHOW ANY NONRECORDED EASEMENTS OR RIGHTS-OF-WAY.

NO FRESHWATER WETLANDS, AS DEFINED BY THE NEW JERSEY "FRESHWATER WETLANDS PROTECTION ACT" (N.J.S.A. 13:9B-1), ARE INTENDED TO BE SHOWN OR DELINEATED AS PART OF THIS SURVEY.

THE ORIGINAL OF THIS DRAWING IS THE PROPERTY OF FRALINGER ENGINEERING PA.

UTILITIES

ELECTRIC
ATLANTIC CITY ELECTRIC
428 ELLIS STREET
CLASSBORO, NJ 08028

GAS
SOUTH JERSEY GAS COMPANY
1211 N. SECOND STREET
MILLVILLE, NJ 08332

SEWERAGE
CITY OF MILLVILLE SEWER DEPT.
FOWLER ROAD
MILLVILLE, NJ 08332

CABLE TV
COMCAST CABLE
1846 NORTH WEST BLVD.
VINELAND, NJ 08360

TELEPHONE
VERIZON
10 TANSBORO ROAD, 2ND FLOOR
BERLIN, NJ 08009

WATER
CITY OF MILLVILLE WATER DEPT.
CITY HALL, HIGH & SMITH ST.
MILLVILLE, NJ 08332

THIS PLAN HAS BEEN APPROVED BY THE CITY OF MILLVILLE ZONING BOARD.

ZONING BOARD CHAIRPERSON — DATE

ZONING BOARD SECRETARY — DATE

CITY ENGINEER — DATE

STEPHEN J. NARDELLI, P.E., P.P., C.M.E.
PROFESSIONAL ENGINEER
PROFESSIONAL PLANNER N.J. LIC. NO. 33LI00375300
snardelli@fralinger.com
DATE

NO.	DATE	REVISION	BY

Fralinger Engineering
CONSULTING ENGINEERS • PLANNERS • LAND SURVEYORS • ENVIRONMENTAL SERVICES
629 Shiloh Pike
Bridgeton, NJ 08302
Phone: (856) 451-2990
Fax: (856) 455-9702
www.fralinger.com

COVER SHEET
PREPARED FOR
HENDRICKS HOUSE GROUP

MUNICIPALITY: CITY OF MILLVILLE
COUNTY: CUMBERLAND COUNTY
STATE: NEW JERSEY
SCALE: AS NOTED
PROJECT #: 2954.01
CADFILE: 2954.01 COVER.DWG
DATE: 6-1-20
DRAWN BY: JCS
CHECKED BY:

SP-1

P:\29000-29999\2954.01\CADD\DWG\2954.01 COVER.DWG 6/1/2020 10:48 AM Matt Baldree ----

LEGEND

	BOUNDARY
	RIGHT OF WAY
—79—	1' EXISTING CONTOUR INTERVAL
—80—	5' EXISTING CONTOUR INTERVAL
	CENTERLINE
	CHAIN LINK FENCE
G	GAS SERVICE
O/H	OVERHEAD ELECTRIC SERVICE
SS	SANITARY SEWER
	STORM SEWER
W	WATER SERVICE
	WOOD FENCE
	WOODS LINE
BC	BOTTOM OF CURB
CL	CENTERLINE
CMP	CORRUGATED METAL PIPE
EC	EDGE OF CONCRETE
ELEC.	ELECTRIC
EP	EDGE OF PAVEMENT
ES	EDGE OF STONE
F.F.	FINISHED FLOOR ELEVATION
GM	GAS METER
GR	GRATE
ICV	IRRIGATION CONTROL VALVE
INV	INVERT
MB	MAILBOX
PVC	POLYVINYL CHLORIDE
R.O.W.	RIGHT OF WAY
TC	TOP OF CURB
TCP	TERRA COTTA PIPE
TRANS.	TRANSFORMER
U/P	UTILITY POLE
78.6	EXISTING SPOT ELEVATION
	BUSH
GV	GAS VALVE
	GUY WIRE
	LIGHT POLE
	SIGN
	TREE
	UTILITY POLE
	UTILITY POLE WITH LIGHT
WV	WATER VALVE

GENERAL NOTES

1. TAX MAP REFERENCE:
   SHEET 9
   BLOCK 47
   LOT 2
2. DEED REFERENCE:
   BOOK 4077
   PAGE 1005
   DATE 12-02-2010
3. TOTAL LOT AREA: 412,328 S.F. (9.466 ACRES)
4. OWNER:
   PARISH OF ALL SAINTS
   621 DOCK STREET
   MILLVILLE, NJ 08332
5. APPLICANT:
   HENDRICKS HOUSE, INC.
   542 N. WEST BOULEVARD
   VINELAND, NJ 08360
6. ON-SITE BENCHMARKS:
   NAIL SET IN UTILITY POLE #B-47729
   ELEV. = 78.72 (NAVD '88 DATUM)
   NAIL SET IN UTILITY POLE #B-51585
   ELEV. = 82.92 (NAVD '88 DATUM)
7. BOUNDARY AND TOPOGRAPHIC SURVEY PERFORMED BY FRALINGER ENGINEERING, PA, BETWEEN MAY 6 AND MAY 7, 2020.

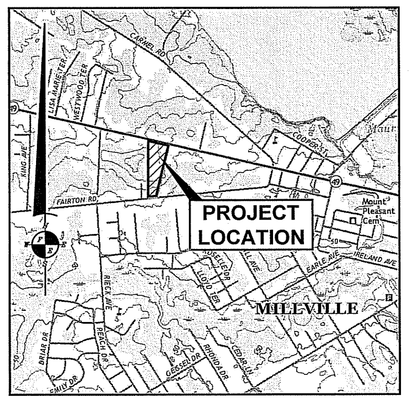

U.S. GEOLOGICAL SURVEY MAP

SCALE : 1"= 2,000'
PART OF THE U.S.C.&G.S.
MILLVILLE, N.J. QUADRANGLE

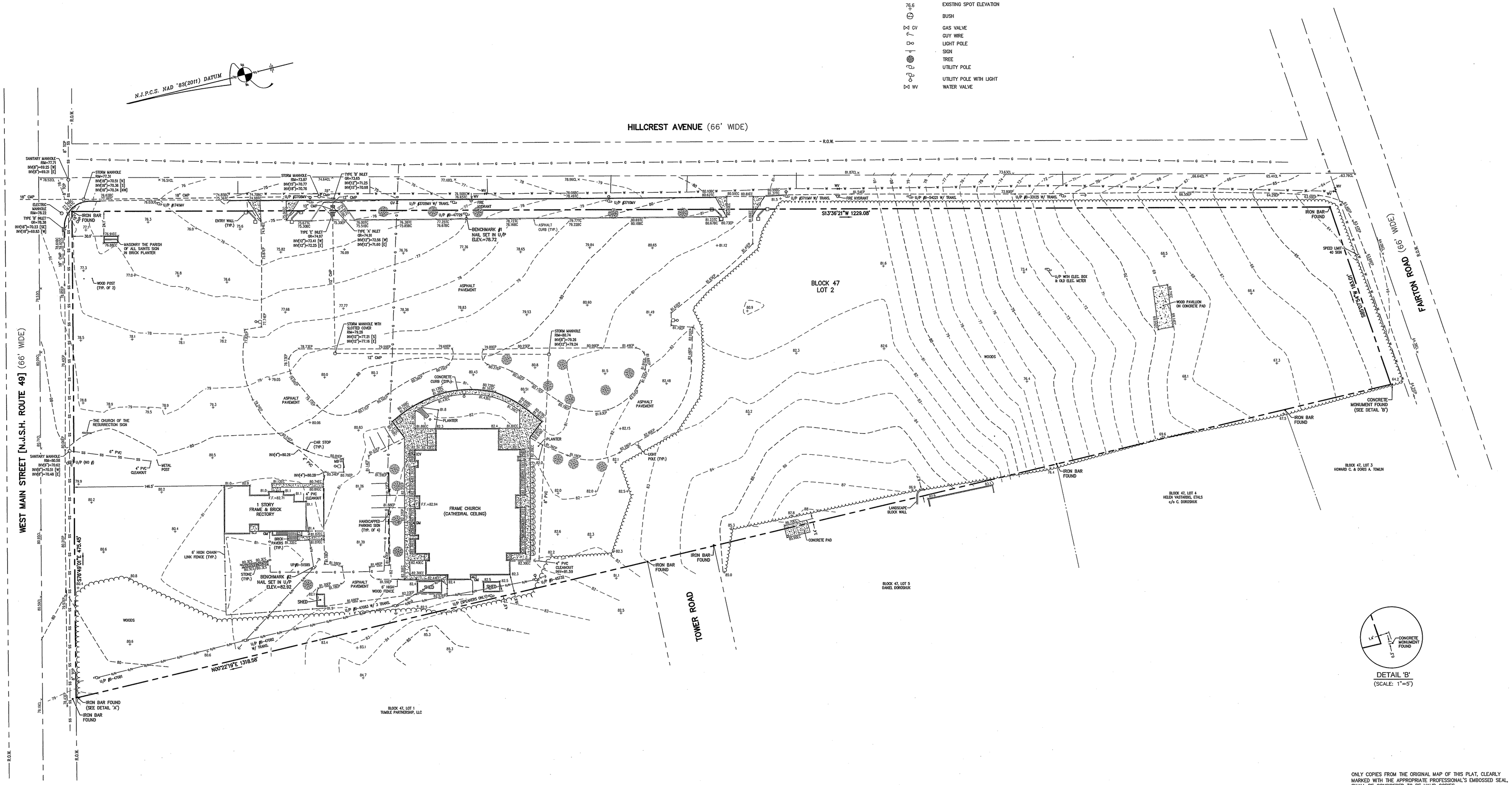

HORIZONTAL SCALE
40 20 0 40 80
(IN FEET)
1 inch = 40 ft.

ONLY COPIES FROM THE ORIGINAL MAP OF THIS PLAT, CLEARLY MARKED WITH THE APPROPRIATE PROFESSIONAL'S EMBOSSED SEAL, SHALL BE CONSIDERED TO BE VALID COPIES.

THIS PLAT HAS BEEN PREPARED WITHOUT THE BENEFIT OF A TITLE REPORT. THIS CORPORATION AND/OR ITS EMPLOYEES ARE NOT LIABLE FOR ERRORS OR OMISSIONS RESULTING FROM THIS CONDITION.

THIS PLAT DOES NOT SHOW OR INTEND TO SHOW ANY NONRECORDED EASEMENTS OR RIGHTS-OF-WAY.

NO FRESHWATER WETLANDS, AS DEFINED BY THE NEW JERSEY FRESHWATER WETLANDS PROTECTION ACT (N.J.S.A. 13:9B-1), ARE INTENDED TO BE SHOWN OR DELINEATED AS PART OF THIS SURVEY.

THE ORIGINAL OF THIS DRAWING IS THE PROPERTY OF FRALINGER ENGINEERING PA.

GUY M. DE FABRITES, P.L.S., P.P.
PROFESSIONAL LAND SURVEYOR N.J. LIC NO. 24105414600
PROFESSIONAL PLANNER N.J. LIC. NO. 33LI00608600
gdefabrites@fralinger.com

DATE

NO.	DATE	REVISION	BY

629 Shiloh Pike
Bridgeton, NJ 08302
Phone: (856) 451-2090
Fax: (856) 455-9702
www.fralinger.com

Fralinger Engineering
CONSULTING ENGINEERS • PLANNERS • LAND SURVEYORS • ENVIRONMENTAL SERVICES

BOUNDARY AND TOPOGRAPHIC SURVEY
PREPARED FOR
HENDRICKS HOUSE GROUP

MUNICIPALITY:	CITY OF MILLVILLE
COUNTY:	CUMBERLAND COUNTY
STATE:	NEW JERSEY
SCALE:	1" = 40'
PROJECT #:	29548.01
DRAWING:	29548.01 SITE PLAN.DWG
DATE:	6-2-20
DRAWN BY:	CJD
CHECKED BY:	

SP-2

P:\29500-29999\29548.01\CADD\DWG\29548.01 SITE PLAN.DWG 6/01/2020 10:31 AM Matt Baldino KJP plotter.ctb

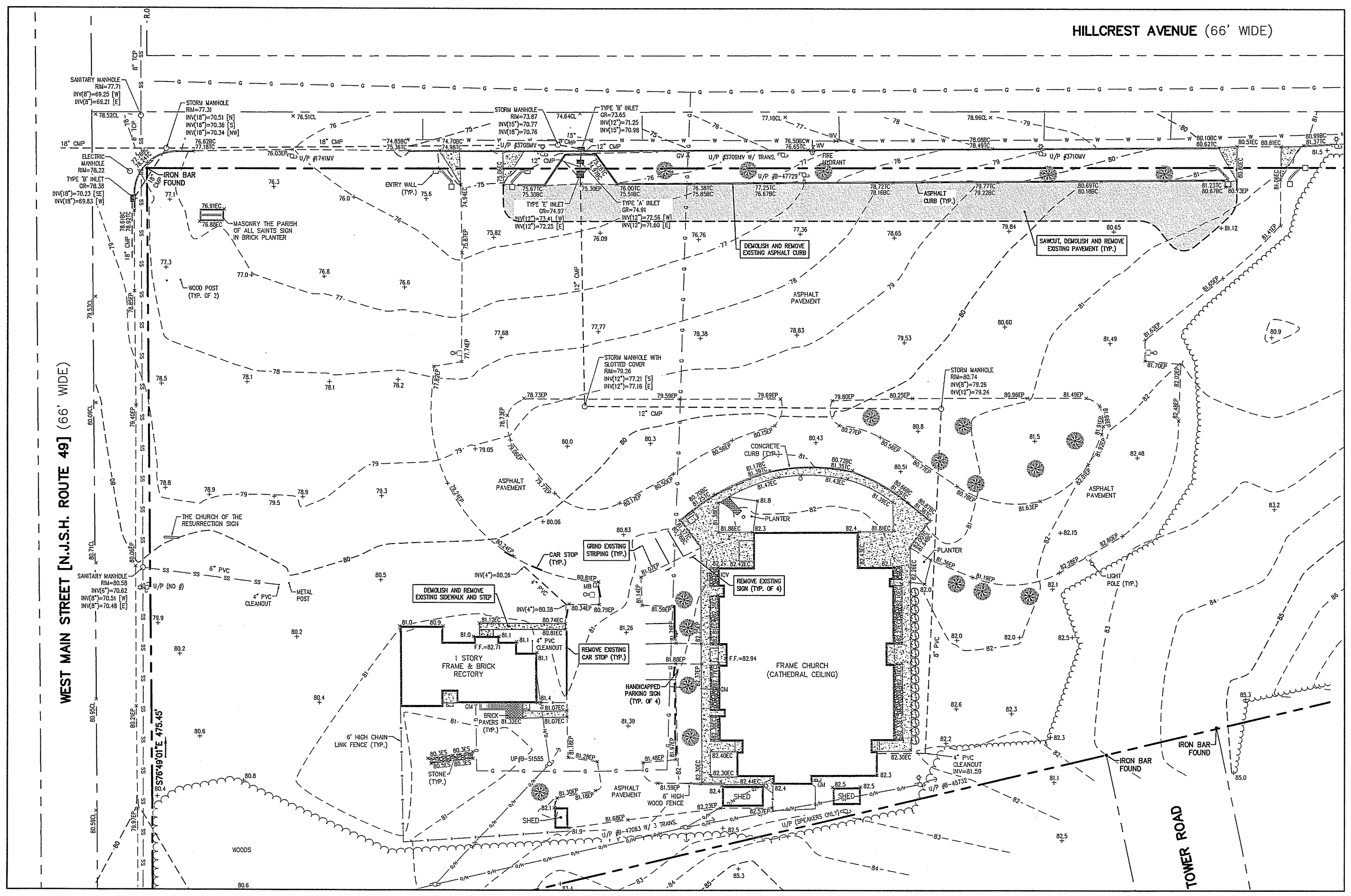

DEMOLITION PLAN
(SCALE: 1"=40')

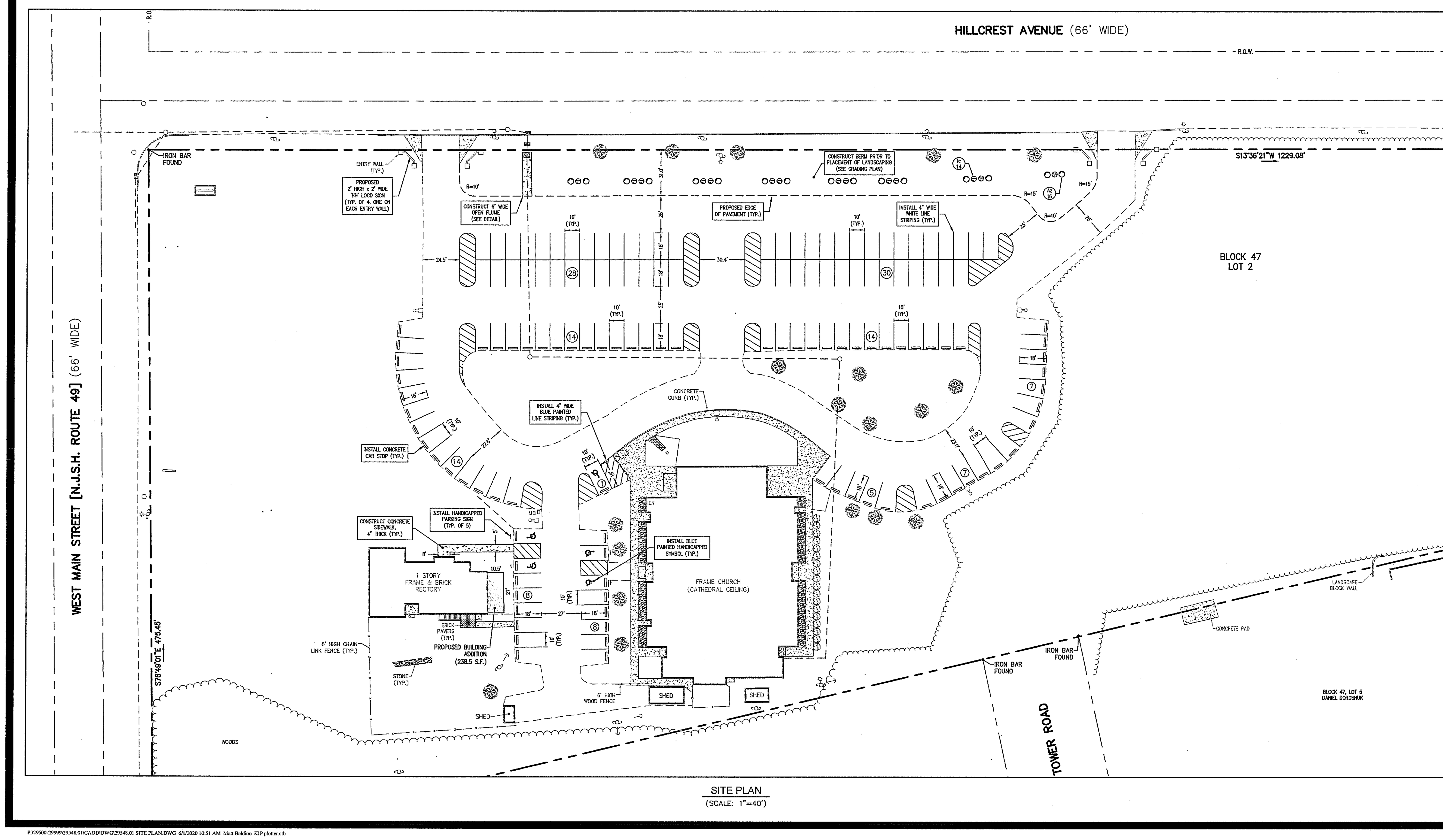

SITE PLAN
(SCALE: 1"=40')

LEGEND

BC	BOTTOM OF CURB
CL	CENTERLINE
CMP	CORRUGATED METAL PIPE
EC	EDGE OF CONCRETE
ELEC.	ELECTRIC
EP	EDGE OF PAVEMENT
ES	EDGE OF STONE
F.F.	FINISHED FLOOR ELEVATION
GM	GAS METER
GR	GRATE
ICV	IRRIGATION CONTROL VALVE
INV	INVERT
MB	MAILBOX
PVC	POLYVINYL CHLORIDE
R.O.W.	RIGHT OF WAY
TC	TOP OF CURB
TCP	TERRA COTTA PIPE
TRANS.	TRANSFORMER
U/P	UTILITY POLE
76.6	EXISTING SPOT ELEVATION
GV	GAS VALVE
WV	WATER VALVE

Line and symbol legend: BOUNDARY; RIGHT OF WAY; 1' EXISTING CONTOUR INTERVAL; 5' EXISTING CONTOUR INTERVAL; CENTERLINE; CHAIN LINK FENCE; GAS SERVICE; OVERHEAD ELECTRIC SERVICE; SANITARY SEWER; STORM SEWER; WATER SERVICE; WOOD FENCE; WOODS LINE; BUSH; GUY WIRE; LIGHT POLE; SIGN; TREE; UTILITY POLE; UTILITY POLE WITH LIGHT

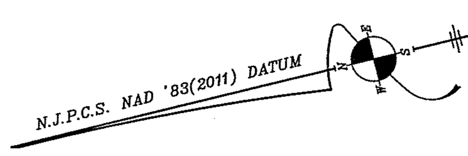

NOTES:

1. CONCRETE SIDEWALKS TO BE 6" THICK AT ALL DRIVEWAY CROSSINGS, CONCRETE TO BE CLASS B, 4,500 PSI @ 28 DAYS.
2. INSTALL 1/2" WIDE TRAVERSE JOINTS IN SIDEWALK AT 20' C-C. FILL JOINTS WITH PREFORMED BITUMINOUS IMPREGNATED FIBER JOINT FILLER WHICH COMPLIES WITH REQUIREMENTS FOR TYPE 3 FILLER IN AASHTO SPECIFICATION M-153.

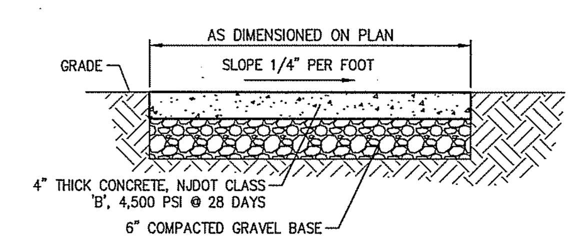

CONCRETE SIDEWALK DETAIL
(NO SCALE)

DEMOLITION NOTES

1. CONTRACTOR SHALL CONTACT ALL UTILITY COMPANIES TO DISCONNECT OR TO CONFIRM DISCONNECTION OF EXISTING UTILITIES AT THE SITE PRIOR TO START OF ANY DEMOLITION WORK.
2. CONTRACTOR SHALL REMOVE ALL BUILDINGS, CONCRETE, FOUNDATIONS, FOOTINGS, ASPHALT, UTILITIES, TREES, ETC. FROM THE SITE, AS INDICATED ON THE PLANS.
3. ALL DEMOLITION/EXCAVATION AREAS TO BE BACK FILLED WITH CLEAN COMPACTED FILL MATERIAL AND STABILIZED WITH 4" TOPSOIL, FERTILIZER AND SEED.
4. ALL BACK FILL SHALL BE PLACED AT 9" LIFTS MAXIMUM AND COMPACTED AT 98% MAXIMUM DENSITY.
5. THE CONTRACTOR SHALL REMOVE ALL DEBRIS, RUBBISH AND OTHER MATERIALS RESULTING FROM THE DEMOLITION OPERATION IN A LEGAL MANNER.
6. BEFORE EXCAVATION IN PROJECT AREA, THE CONTRACTOR SHALL VERIFY THE LOCATION OF ANY UNDERGROUND UTILITIES. SHOULD ANY UNDERGROUND UTILITIES INTERFERE WITH DEMOLITION, THE ENGINEER SHALL BE NOTIFIED BEFORE PROCEEDING WITH WORK. THE CONTRACTOR SHALL CONTACT "ONE-CALL" 1-800-272-1000 A MINIMUM OF 3 DAYS PRIOR TO ANY EXCAVATION FOR ACCURATE FIELD MARKOUT.
7. ALL EXISTING UTILITY POLES ARE TO BE REMAIN UNLESS INDICATED TO BE REMOVED OR RELOCATED.
8. PRIOR TO BEGINNING ANY WORK ON THIS SITE, THE CONTRACTOR SHALL CONDUCT A FIELD INSPECTION OF THE SITE AND CONFIRM THAT HORIZONTAL AND VERTICAL INFORMATION SHOWN HEREON IS ACCURATE. ANY DISCREPANCY SHALL BE REPORTED TO THE ENGINEER IMMEDIATELY SO THAT ANY NECESSARY ADJUSTMENTS TO THE PLAN CAN BE MADE.
9. THE CONTRACTOR IS RESPONSIBLE FOR ALL SITE CLEARING AND SITE RESTORATION AS PER CONTRACT SPECIFICATIONS AND/OR REQUIREMENTS OF THE PROJECT ENGINEER.
10. ALL CONSTRUCTION TO BE PERFORMED IN ACCORDANCE WITH N.J.D.O.T. 2007 STANDARD SPECIFICATIONS AND SUPPLEMENTARY SPECIFICATIONS FOR THIS PROJECT.
11. THIS DRAWING DOES NOT INCLUDE THE NECESSARY COMPONENTS FOR CONSTRUCTION SAFETY.
12. ALL CONSTRUCTION MUST BE DONE IN COMPLIANCE WITH THE OCCUPATIONAL SAFETY AND HEALTH ACT OF 1970 AND ALL RULES AND REGULATIONS THERETO APPURTENANT.

PLANTING SCHEDULE

KEY	QUANTITY	BOTANICAL NAME	COMMON NAME	SIZE & REMARKS
Az	16	Azalea blaauws 'high tide'	Azalea – salmon	#3 Container
Ic	14	Ilex crenata	Japanese Holly	12"–15" Ht., 1 gal. Cont.

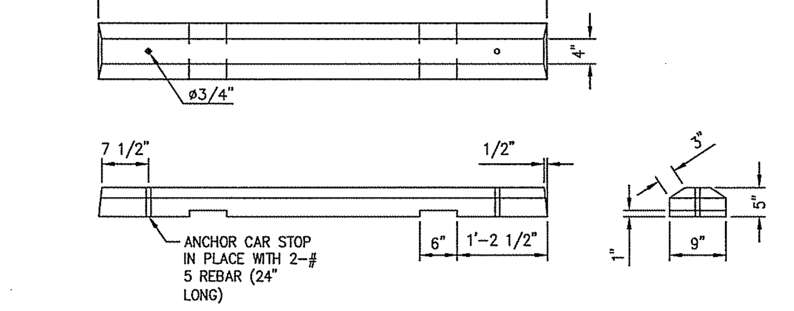

CONCRETE CAR STOP
(NO SCALE)

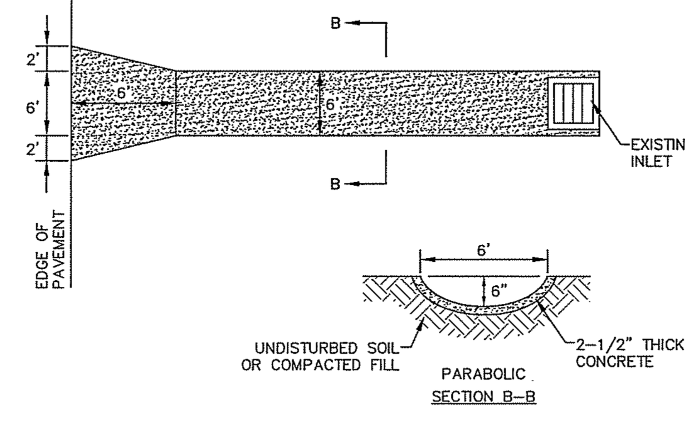

OPEN FLUME DETAIL
(NO SCALE)

SITE PLAN NOTES

1. THE PURPOSE OF SITE PLAN:

   CONVERSION OF AN EXISTING CHURCH FACILITY TO A TREATMENT FACILITY, CONSTRUCTION OF A NEW BUILDING ADDITION AND RECONFIGURATION OF AN EXISTING PARKING LOT.
2. PRIOR TO BEGINNING ANY WORK ON THIS SITE, THE CONTRACTOR SHALL CONDUCT A FIELD INSPECTION OF THE SITE AND CONFIRM THAT HORIZONTAL AND VERTICAL INFORMATION SHOWN HEREON IS ACCURATE. ANY DISCREPANCY SHALL BE REPORTED TO THE ENGINEER IMMEDIATELY SO THAT ANY NECESSARY ADJUSTMENTS TO THE PLAN CAN BE MADE.
3. THE CONTRACTOR IS RESPONSIBLE FOR ALL SITE CLEARING AND SITE RESTORATION AS PER CONTRACT SPECIFICATIONS AND/OR REQUIREMENTS OF THE PROJECT ENGINEER.
4. BEFORE EXCAVATION IN PROJECT AREA, THE CONTRACTOR IS TO VERIFY THE LOCATION OF ANY UNDERGROUND UTILITIES. SHOULD UNDERGROUND STRUCTURES OR FACILITIES INTERFERE WITH PROJECT CONSTRUCTION, THE ENGINEER SHALL BE NOTIFIED BEFORE PROCEEDING WITH WORK. THE CONTRACTOR SHALL CONTACT "ONE CALL" A MINIMUM OF 3 DAYS PRIOR TO COMMENCEMENT OF ANY EXCAVATION FOR ACCURATE FIELD LOCATION, FOR MARKOUT CALL 1-800-272-1000.
5. ALL CONSTRUCTION TO BE PERFORMED IN ACCORDANCE WITH N.J.D.O.T. 2007 STANDARD SPECIFICATIONS AND SUPPLEMENTARY SPECIFICATIONS FOR THIS PROJECT.
6. THIS DRAWING DOES NOT INCLUDE THE NECESSARY COMPONENTS FOR CONSTRUCTION SAFETY.
7. ALL CONSTRUCTION MUST BE DONE IN COMPLIANCE WITH THE OCCUPATIONAL SAFETY AND HEALTH ACT OF 1970 AND ALL RULES AND REGULATIONS THERETO APPURTENANT.
8. ALL CONCRETE SIDEWALK, CURB, OR PAVEMENT DISTURBED WITHIN ROAD RIGHT-OF-WAYS TO BE REPAIRED IN KIND.
9. ALL STOP SIGNS, OTHER SIGNS AND/OR SAFETY DEVICES WHICH ARE REMOVED DURING CONSTRUCTION ARE TO BE REINSTALLED AT THE PROPER LOCATION.
10. ALL PARKING STALL LINES, HANDICAPPED SYMBOLS, LOADING ZONES, AND/OR TRAFFIC FLOW ARROWS TO BE PAINTED ON PAVEMENT SURFACE WHERE REQUIRED.
11. PRIVATE WASTE REMOVAL COMPANY TO BE CONTRACTED FOR REMOVAL OF SOLID WASTE.
12. EXISTING UTILITIES TO BE EXTENDED OR RELOCATED TO SITE IN ACCORDANCE WITH LOCAL UTILITY COMPANY REQUIREMENTS.
13. ALL AREAS DISTURBED DURING CONSTRUCTION TO BE RESTORED WITH 5" THICK TOPSOIL, FERTILIZED, AND SEEDED IN ACCORDANCE WITH DETAILS FOR SOIL EROSION.
14. IF A SUFFICIENT VOLUME OF TOPSOIL DOES NOT EXIST ON-SITE, IT WILL NEED TO BE BROUGHT IN FROM AN OFFSITE SOURCE, AND SHOULD MEET THE REQUIREMENTS OF THE "STANDARD FOR TOPSOILING".

LANDSCAPE NOTES

1. PLANTING BEDS TO BE MULCHED WITH DOUBLE SHREDDED BARK.
2. SEE SOIL EROSION AND SEDIMENT CONTROL PLAN FOR TOPSOILING, FERTILIZING, AND SEEDING METHODS FOR ALL LAWN AREAS.
3. ALL LANDSCAPE MATERIAL TO BE GUARANTEED BY DEVELOPER FOR A PERIOD OF ONE (1) YEAR. ALL PLANTING MATERIAL TO BE IN ACCORDANCE WITH THE STANDARDS OF THE AMERICAN ASSOCIATION OF NURSERYMEN.
4. ALL PLANTED SHRUB AND GROUNDCOVER AREAS SHALL ACHIEVE A HUNDRED (100) PERCENT COVERAGE OF THEIR PLANTING AREA WITHIN ONE (1) YEAR.

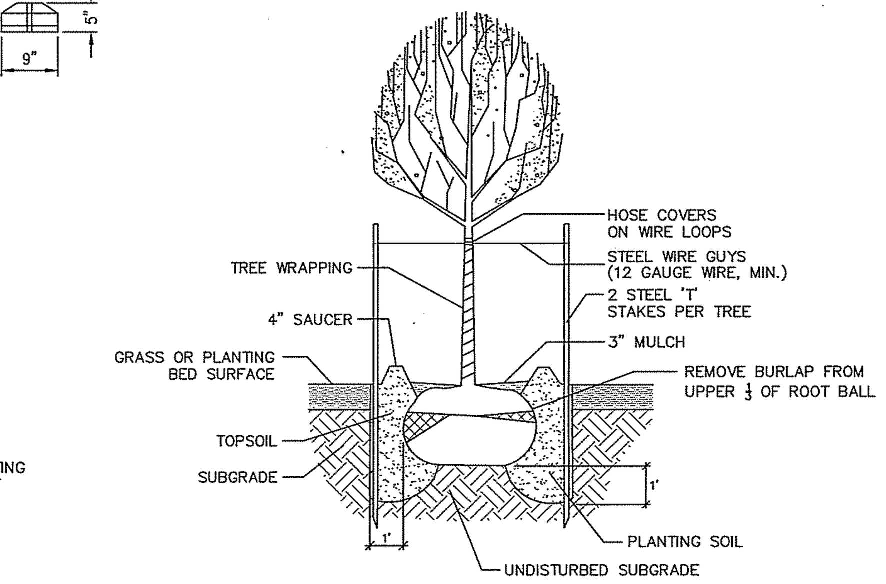

DECIDUOUS
TREE PLANTING DETAIL
(NO SCALE)

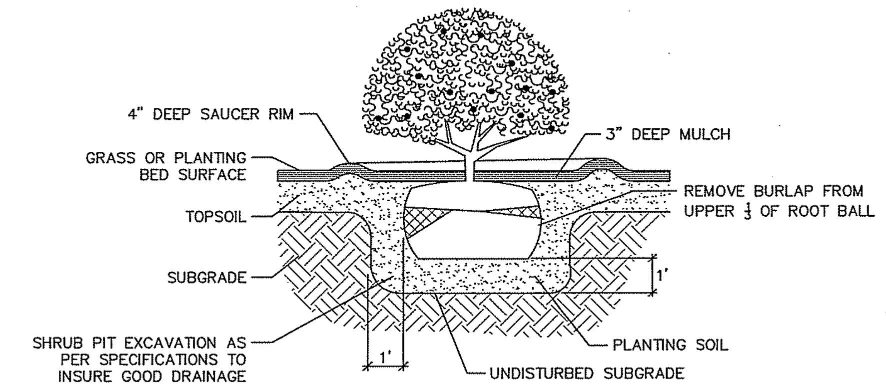

SHRUB PLANTING DETAIL
(NO SCALE)

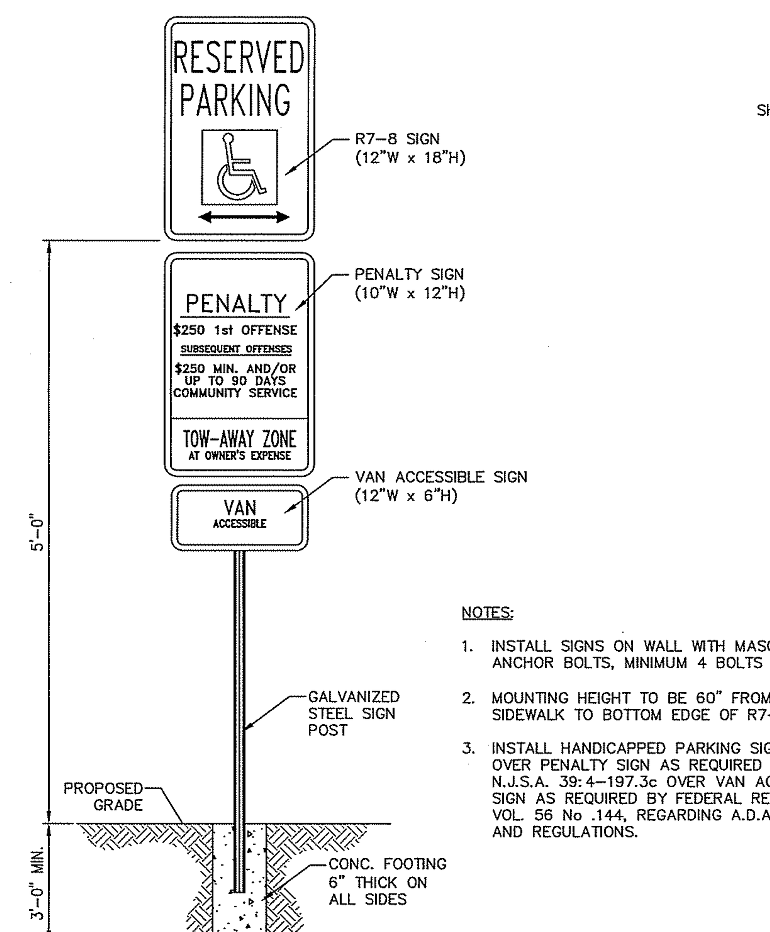

NOTES:

1. INSTALL SIGNS ON WALL WITH MASONRY ANCHOR BOLTS, MINIMUM 4 BOLTS PER SIGN.
2. MOUNTING HEIGHT TO BE 60" FROM SIDEWALK TO BOTTOM EDGE OF R7-8 SIGN.
3. INSTALL HANDICAPPED PARKING SIGN R7-8 OVER PENALTY SIGN AS REQUIRED BY N.J.S.A. 39:4-197.3c OVER VAN ACCESSIBLE SIGN AS REQUIRED BY FEDERAL REGISTER VOL. 56 No .144, REGARDING A.D.A. RULES AND REGULATIONS.

NOTE:
ALL SIGNS SHALL CONFORM TO THE MANUAL ON UNIFORM TRAFFIC CONTROL DEVICES (MUTCD), CURRENT EDITION.

HANDICAPPED ACCESSIBLE PARKING SIGN
(NO SCALE)

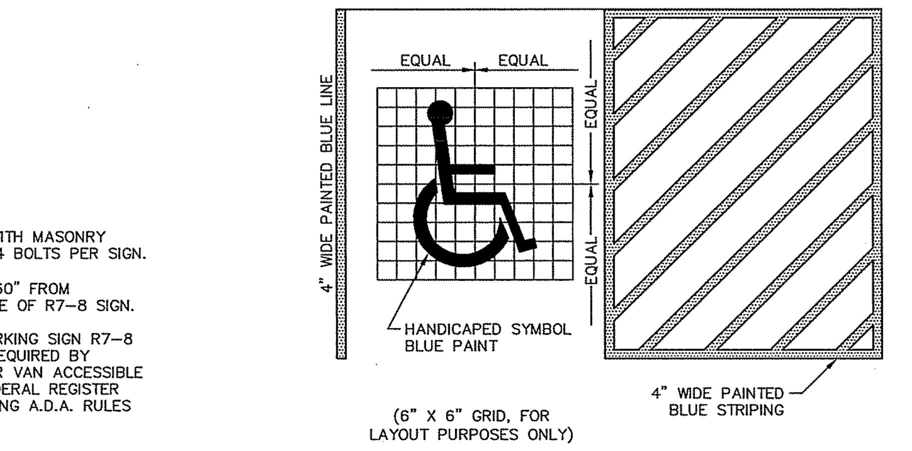

HANDICAPPED PAINTED MARKING
(NO SCALE)

HORIZONTAL SCALE
40 20 0 40 80
(IN FEET)
1 inch = 40 ft.

ONLY COPIES FROM THE ORIGINAL MAP OF THIS PLAT, CLEARLY MARKED WITH THE APPROPRIATE PROFESSIONAL'S EMBOSSED SEAL, SHALL BE CONSIDERED TO BE VALID COPIES.

THIS PLAT HAS BEEN PREPARED WITHOUT THE BENEFIT OF A TITLE REPORT. THIS CORPORATON AND/OR ITS EMPLOYEES ARE NOT LIABLE FOR ERRORS OR OMISSIONS RESULTING FROM THIS CONDITION.

THIS PLAT DOES NOT SHOW OR INTEND TO SHOW ANY NONRECORDED EASEMENTS OR RIGHTS-OF-WAY.

NO FRESHWATER WETLANDS, AS DEFINED BY THE NEW JERSEY FRESHWATER WETLANDS PROTECTION ACT (N.J.S.A. 13:9B-1), ARE INTENDED TO BE SHOWN OR DELINEATED AS PART OF THIS SURVEY.

THE ORIGINAL OF THIS DRAWING IS THE PROPERTY OF FRALINGER ENGINEERING PA.

STEPHEN J. NARDELLI, P.E., P.P., C.M.E.
PROFESSIONAL ENGINEER N.J. LIC. NO. 24GE03712700
PROFESSIONAL PLANNER N.J. LIC. NO. 33LI00572400
snardelli@fralinger.com
6/1/20 DATE

NO.	DATE	REVISION	BY

Fralinger Engineering
629 Shiloh Pike
Bridgeton, NJ 08302
Phone: (856) 451-2990
Fax: (856) 455-9702
www.fralinger.com
CONSULTING ENGINEERS • PLANNERS • LAND SURVEYORS • ENVIRONMENTAL SERVICES

DEMOLITION AND SITE PLAN
PREPARED FOR
HENDRICKS HOUSE GROUP

MUNICIPALITY:	CITY OF MILLVILLE	PROJECT #:	29548.01
COUNTY:	CUMBERLAND COUNTY	CADD FILE #:	29548.01 SITE PLAN.DWG
STATE:	NEW JERSEY	DATE:	6-1-20
SCALE:	1" = 40'	DRAWN BY:	MB
		CHECKED BY:	

SP-3

P:\29500-29999\29548.01\CADD\DWG\29548.01 SITE PLAN.DWG 6/1/2020 10:51 AM Matt Baldino KIP plotter.ctb

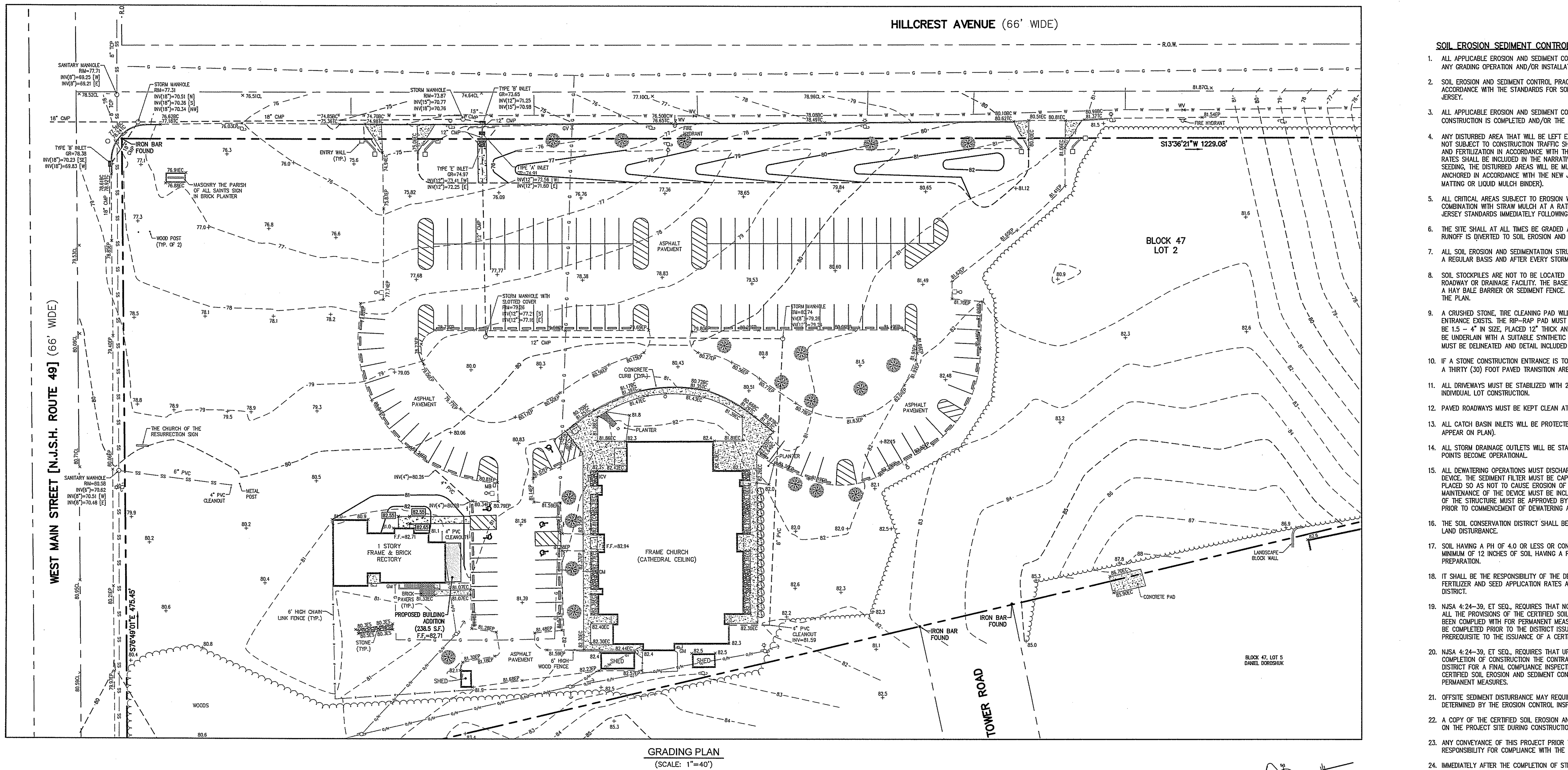

GRADING PLAN
(SCALE: 1"=40')

N.J.P.C.S. NAD '83(2011) DATUM

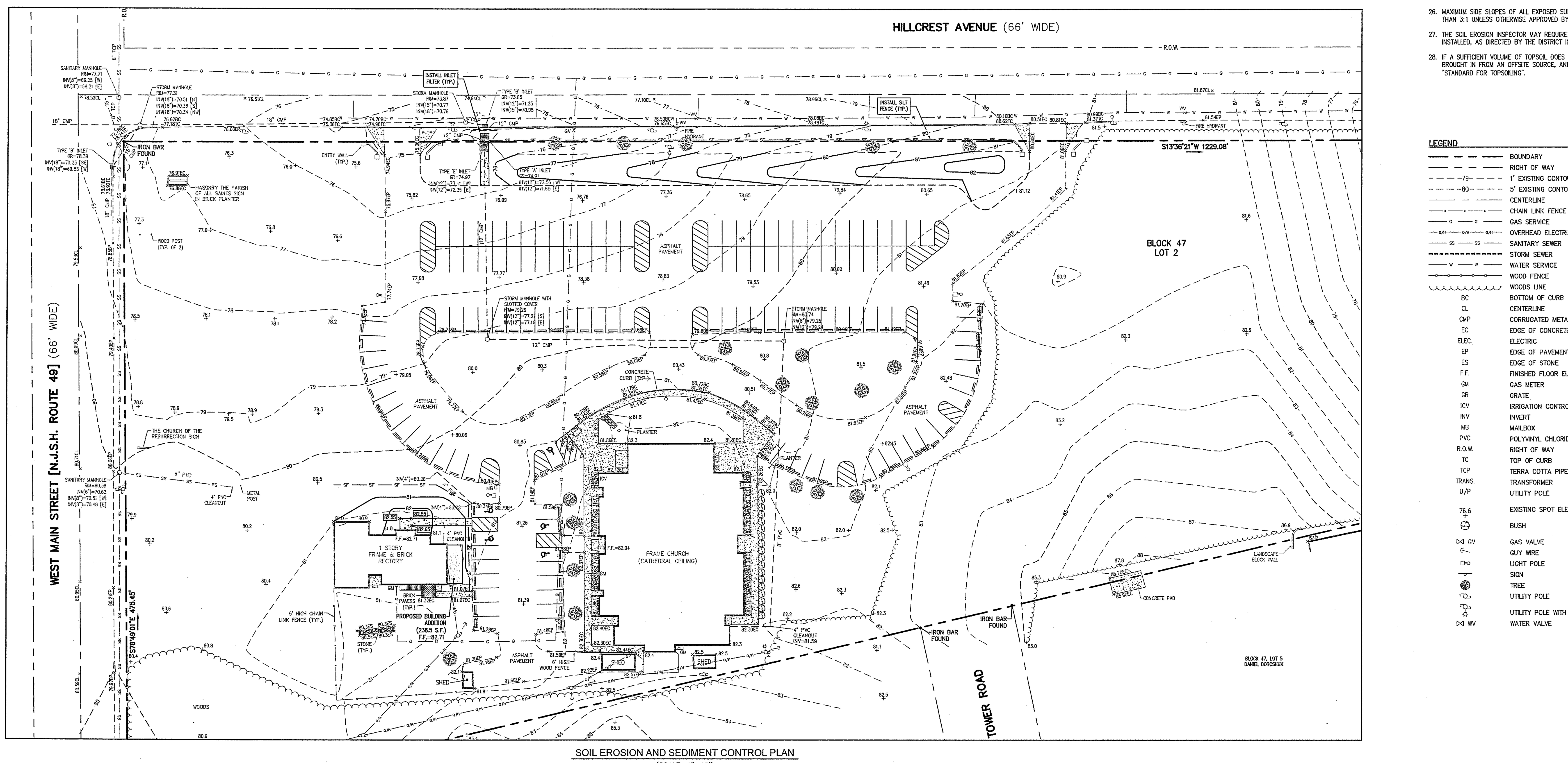

SOIL EROSION AND SEDIMENT CONTROL PLAN
(SCALE: 1"=40')

SOIL EROSION SEDIMENT CONTROL DETAILS

1. ALL APPLICABLE EROSION AND SEDIMENT CONTROL PRACTICES SHALL BE IN PLACE PRIOR TO ANY GRADING OPERATION AND/OR INSTALLATION OF PROPOSED STRUCTURES OR UTILITIES.
2. SOIL EROSION AND SEDIMENT CONTROL PRACTICES ON THE PLAN SHALL BE CONSTRUCTED IN ACCORDANCE WITH THE STANDARDS FOR SOIL EROSION AND SEDIMENT CONTROL IN NEW JERSEY.
3. ALL APPLICABLE EROSION AND SEDIMENT CONTROL PRACTICES SHALL BE LEFT IN PLACE UNTIL CONSTRUCTION IS COMPLETED AND/OR THE AREA IS STABILIZED.
4. ANY DISTURBED AREA THAT WILL BE LEFT EXPOSED FOR MORE THAN SIXTY (60) DAYS AND NOT SUBJECT TO CONSTRUCTION TRAFFIC SHALL IMMEDIATELY RECEIVE A TEMPORARY SEEDING AND FERTILIZATION IN ACCORDANCE WITH THE NEW JERSEY STANDARDS AND APPLICATION RATES SHALL BE INCLUDED IN THE NARRATIVE. IF THE SEASON PROHIBITS TEMPORARY SEEDING, THE DISTURBED AREAS WILL BE MULCHED WITH SALT HAY OR EQUIVALENT AND ANCHORED IN ACCORDANCE WITH THE NEW JERSEY STANDARDS (I.E. PEG AND TWINE, MULCH MATTING OR LIQUID MULCH BINDER).
5. ALL CRITICAL AREAS SUBJECT TO EROSION WILL RECEIVE A TEMPORARY SEEDING IN COMBINATION WITH STRAW MULCH AT A RATE OF 2 TONS PER ACRE, ACCORDING TO THE NEW JERSEY STANDARDS IMMEDIATELY FOLLOWING ROUGH GRADING.
6. THE SITE SHALL AT ALL TIMES BE GRADED AND MAINTAINED SUCH THAT ALL STORMWATER RUNOFF IS DIVERTED TO SOIL EROSION AND SEDIMENT CONTROL FACILITIES.
7. ALL SOIL EROSION AND SEDIMENTATION STRUCTURES WILL BE INSPECTED AND MAINTAINED ON A REGULAR BASIS AND AFTER EVERY STORM EVENT.
8. SOIL STOCKPILES ARE NOT TO BE LOCATED WITHIN FIFTY (50) FEET OF A FLOODPLAIN, SLOPE, ROADWAY OR DRAINAGE FACILITY. THE BASE OF ALL STOCKPILES SHOULD BE PROTECTED BY A HAY BALE BARRIER OR SEDIMENT FENCE. PROPOSED LOCATIONS MUST BE DELINEATED ON THE PLAN.
9. A CRUSHED STONE, TIRE CLEANING PAD WILL BE INSTALLED WHEREVER A CONSTRUCTION ENTRANCE EXISTS. THE RIP-RAP PAD MUST BE 100 FEET IN LENGTH AND THE STONE MUST BE 1.5 – 4" IN SIZE, PLACED 12" THICK AND THE FULL WIDTH OF THE ENTRANCE. IT SHOULD BE UNDERLAIN WITH A SUITABLE SYNTHETIC FILTER FABRIC AND MAINTAINED. (THE STRUCTURE MUST BE DELINEATED AND DETAIL INCLUDED ON THE PLANS.)
10. IF A STONE CONSTRUCTION ENTRANCE IS TO BE USED AS AN EXIT ON TO A MAJOR HIGHWAY, A THIRTY (30) FOOT PAVED TRANSITION AREA SHALL BE INSTALLED.
11. ALL DRIVEWAYS MUST BE STABILIZED WITH 2 1/2" CRUSHED STONE OR SUBBASE PRIOR TO INDIVIDUAL LOT CONSTRUCTION.
12. PAVED ROADWAYS MUST BE KEPT CLEAN AT ALL TIMES.
13. ALL CATCH BASIN INLETS WILL BE PROTECTED DURING CONSTRUCTION (FILTER DETAILS APPEAR ON PLAN).
14. ALL STORM DRAINAGE OUTLETS WILL BE STABILIZED, AS REQUIRED, BEFORE THE DISCHARGE POINTS BECOME OPERATIONAL.
15. ALL DEWATERING OPERATIONS MUST DISCHARGE DIRECTLY INTO A SEDIMENT FILTRATION DEVICE. THE SEDIMENT FILTER MUST BE CAPABLE OF FILTERING THE SEDIMENT AND BE PLACED SO AS NOT TO CAUSE EROSION OF THE DOWNSTREAM AREA. DETAILS AND MAINTENANCE OF THE DEVICE MUST BE INCLUDED ON THE PLANS. FIELD PLACEMENT AND USE OF THE STRUCTURE MUST BE APPROVED BY THE DISTRICT EROSION CONTROL INSPECTOR PRIOR TO COMMENCEMENT OF DEWATERING ACTIVITIES.
16. THE SOIL CONSERVATION DISTRICT SHALL BE NOTIFIED, IN WRITING, 72 HOURS PRIOR TO ANY LAND DISTURBANCE.
17. SOIL HAVING A PH OF 4.0 OR LESS OR CONTAINING IRON SULFIDE MUST BE COVERED WITH A MINIMUM OF 12 INCHES OF SOIL HAVING A PH OF 5.0 OR MORE BEFORE SEEDBED PREPARATION.
18. IT SHALL BE THE RESPONSIBILITY OF THE DEVELOPER TO PROVIDE CONFIRMATION OF LIME, FERTILIZER AND SEED APPLICATION RATES AT THE REQUEST OF THE SOIL CONSERVATION DISTRICT.
19. NJSA 4:24-39, ET SEQ., REQUIRES THAT NO CERTIFICATE OF OCCUPANCY BE ISSUED BEFORE ALL THE PROVISIONS OF THE CERTIFIED SOIL EROSION AND SEDIMENT CONTROL PLAN HAVE BEEN COMPLIED WITH FOR PERMANENT MEASURES. ALL SITE WORK FOR THE PROJECT MUST BE COMPLETED PRIOR TO THE DISTRICT ISSUING A REPORT OF COMPLIANCE AS A PREREQUISITE TO THE ISSUANCE OF A CERTIFICATE OF OCCUPANCY BY THE MUNICIPALITY.
20. NJSA 4:24-39, ET SEQ., REQUIRES THAT UPON PERMANENT SITE STABILIZATION AND COMPLETION OF CONSTRUCTION THE CONTRACTOR SHALL APPLY TO THE SOIL CONSERVATION DISTRICT FOR A FINAL COMPLIANCE INSPECTION TO CHECK THAT ALL THE PROVISIONS OF THE CERTIFIED SOIL EROSION AND SEDIMENT CONTROL PLAN HAVE BEEN COMPLIED WITH FOR PERMANENT MEASURES.
21. OFFSITE SEDIMENT DISTURBANCE MAY REQUIRE ADDITIONAL CONTROL MEASURES TO BE DETERMINED BY THE EROSION CONTROL INSPECTOR.
22. A COPY OF THE CERTIFIED SOIL EROSION AND SEDIMENT CONTROL PLAN MUST BE MAINTAINED ON THE PROJECT SITE DURING CONSTRUCTION.
23. ANY CONVEYANCE OF THIS PROJECT PRIOR TO ITS COMPLETION WILL TRANSFER FULL RESPONSIBILITY FOR COMPLIANCE WITH THE CERTIFIED PLAN TO ALL SUBSEQUENT OWNERS.
24. IMMEDIATELY AFTER THE COMPLETION OF STRIPPING AND STOCKPILING OF TOPSOIL, SEED THE STOCKPILE WITH ANNUAL RYE GRASS. STABILIZE TOPSOIL STOCKPILES WITH STRAW MULCH FOR PROTECTION IF THE SEASON DOES NOT PERMIT THE APPLICATION AND ESTABLISHMENT OF TEMPORARY SEEDING.
25. ANY CHANGES TO THE SITE PLAN WILL REQUIRE THE SUBMISSION OF A REVISED SOIL EROSION AND SEDIMENT CONTROL PLAN TO THE SOIL CONSERVATION DISTRICT. THE REVISED PLAN MUST BE IN ACCORDANCE WITH THE CURRENT NEW JERSEY STANDARDS FOR SOIL EROSION AND SEDIMENT CONTROL.
26. MAXIMUM SIDE SLOPES OF ALL EXPOSED SURFACES SHALL NOT BE CONSTRUCTED STEEPER THAN 3:1 UNLESS OTHERWISE APPROVED BY THE DISTRICT.
27. THE SOIL EROSION INSPECTOR MAY REQUIRE ADDITIONAL SOIL EROSION MEASURES TO BE INSTALLED, AS DIRECTED BY THE DISTRICT INSPECTOR.
28. IF A SUFFICIENT VOLUME OF TOPSOIL DOES NOT EXIST ON-SITE, IT WILL NEED TO BE BROUGHT IN FROM AN OFFSITE SOURCE, AND SHOULD MEET THE REQUIREMENTS OF THE "STANDARD FOR TOPSOILING".

LEGEND

———	BOUNDARY
— — —	RIGHT OF WAY
— —79— —	1' EXISTING CONTOUR INTERVAL
— —80— —	5' EXISTING CONTOUR INTERVAL
— - —	CENTERLINE
—x—x—	CHAIN LINK FENCE
—G—G—	GAS SERVICE
—O/H—O/H—	OVERHEAD ELECTRIC SERVICE
—SS—SS—	SANITARY SEWER
- - - - -	STORM SEWER
—W—W—	WATER SERVICE
—o—o—	WOOD FENCE
︶︶︶	WOODS LINE
BC	BOTTOM OF CURB
CL	CENTERLINE
CMP	CORRUGATED METAL PIPE
EC	EDGE OF CONCRETE
ELEC.	ELECTRIC
EP	EDGE OF PAVEMENT
ES	EDGE OF STONE
F.F.	FINISHED FLOOR ELEVATION
GM	GAS METER
GR	GRATE
ICV	IRRIGATION CONTROL VALVE
INV	INVERT
MB	MAILBOX
PVC	POLYVINYL CHLORIDE
R.O.W.	RIGHT OF WAY
TC	TOP OF CURB
TCP	TERRA COTTA PIPE
TRANS.	TRANSFORMER
U/P	UTILITY POLE
76.6 +	EXISTING SPOT ELEVATION
⊕	BUSH
⋈ GV	GAS VALVE
←	GUY WIRE
☐o	LIGHT POLE
—⊤—	SIGN
✺	TREE
⊙	UTILITY POLE
⊙☆	UTILITY POLE WITH LIGHT
⋈ WV	WATER VALVE

SOIL EROSION AND SEDIMENT CONTROL STATEMENTS

A. SEQUENCE OF DEVELOPMENT
1. SITE CLEARING, BACKFILL AND COMPACT FILL MATERIAL BROUGHT TO SITE, STRIP TOPSOIL WHERE REQUIRED FROM SITE AND INSTALLATION OF SOIL EROSION MEASURES, (SILT FENCE, CONSTRUCTION DRIVE, INLET FILTERS, ETC.).
2. CONSTRUCTION OF BUILDING ADDITION.
3. REMOVAL OF EXISTING ASPHALT AND CURB, RE-STRIPING OF PARKING LOT.
4. INSTALLATION OF TOPSOIL, GRADING, SEEDING, FERTILIZING AND LANDSCAPING WITHIN DESIGNATED AREAS.

B. PROJECT SITE CLEARING COVERS AREA OF BUILDING ADDITION AND NEW LANDSCAPED AREA. THE TOTAL AREA DISTURBED IS APPROXIMATELY 13,415± SQUARE FEET (0.31 ACRES OF LAND).

C. EXISTING AND PROPOSED ELEVATIONS ARE SHOWN ON THE PLANS.

D. THE LOCATION OF THE SEDIMENT CONTROL STRUCTURES AND EROSION CONTROL STRUCTURES ARE SHOWN ON THE PLANS. A WASHED STONE TRAFFIC CONTROL STRUCTURE IS SHOWN IN THE CONSTRUCTION DRIVEWAY AREA ADJACENT TO THE FACILITY DRIVEWAY. IF REQUIRED, TRAFFIC CONTROL STRUCTURE SHALL BE 12" LAYER OF CRUSHED STONE, ASTM C-33, SIZE 1-1/2" - 2".

PERMANENT AND TEMPORARY SEEDING

E. NONSTRUCTURAL METHODS OF EROSION CONTROL ARE AS FOLLOWS:

ANY SOIL STOCKPILED FOR MORE THAN 30 DAYS SHALL BE STABILIZED WITH 1 LB. OF PERENNIAL RYEGRASS AT A RATE OF 1 POUND PER 1,000 SQUARE FEET AND WORKED INTO A DEPTH OF 4 INCHES.

LIME SHALL BE APPLIED AT A RATE OF 90 LBS. PER 1,000 SQUARE FEET OR 2 TONS PER ACRE AND WORKED INTO A DEPTH OF 4 INCHES. FERTILIZER EQUIVALENT TO 10-20-10 SHALL BE APPLIED AT A RATE OF 11 POUNDS PER 1,000 SQUARE FEET, OR 500 LBS./ACRE.

SEED MIX SHALL BE APPLIED AT A RATE OF:
HARD FESCUE – 2.7 LBS./1,000 SQ. FT.
PERENNIAL RYEGRASS – 0.7 LBS./1,000 SQ. FT.
KENTUCKY BLUEGRASS – 0.9 LBS./1,000 SQ. FT.

TOPSOIL SHALL BE SPREAD TO A MINIMUM DEPTH OF 5 INCHES AND BE GRADED FROM THE BUILDINGS TO THE PARKING AREAS AND ALONG LANDSCAPED AREAS. STRAW MULCH SHALL BE APPLIED AT A RATE OF 90 LBS. PER 1,000 SQUARE FEET.

MULCH ANCHORING SHOULD BE ACCOMPLISHED IMMEDIATELY AFTER PLACEMENT OF MULCH TO MINIMIZE LOSS BY WIND OR WATER. THIS MAY BE DONE BY ONE OF THE FOLLOWING METHODS, DEPENDING UPON THE SIZE OF THE AREA, STEEPNESS OF SLOPES AND COST:

PEG AND TWINE
MULCH NETTINGS
MULCH ANCHORING TOOL
LIQUID MULCH BINDERS

F. STABILIZATION WITH MULCH ONLY:
WHEN SEASONS AND OTHER CONDITIONS ARE NOT SUITABLE FOR GROWING AN EROSION-RESISTANT COVER, (OCT. 15 – FEB. 15, AND MAY 1 – AUG. 15) ALL EXPOSED AREAS WILL BE STABILIZED WITH MULCH. SALT HAY OR STRAW WILL BE APPLIED AT A RATE OF 90 – 115 LBS./1,000 SQ. FT. AND WILL BE ANCHORED IMMEDIATELY AFTER PLACEMENT TO MINIMIZE LOSS BY WIND AND WATER. STABILIZATION WITH MULCH WILL COMPLY WITH PAGE 5-1 OF SOIL EROSION/SEDIMENT CONTROL PRACTICES IN NEW JERSEY, INCLUDING DETAILS ON ANCHORING MULCH.

G. ALL STRUCTURES (BUILDINGS, PERMANENT VEGETATIVE COVER AND LANDSCAPING) WILL BE MAINTAINED BY THE OWNER AND MANAGEMENT OF THIS PARCEL OF GROUND.

H. ENTIRE PROJECT AREA IS 9.466 ACRES.

I. SOIL TYPE PRESENT IN WORK AREA:

DocC: DOWNER LOAMY SAND, 5 TO 10 PERCENT SLOPES

J. DUST CONTROL:
WATER TRUCK TO BE PROVIDED TO SPRINKLE SURFACE UNTIL WET.

K. ALL SEDIMENT SPILLED, DROPPED, WASHED OR TRACKED ONTO PUBLIC RIGHTS-OF-WAY MUST BE REMOVED IMMEDIATELY.

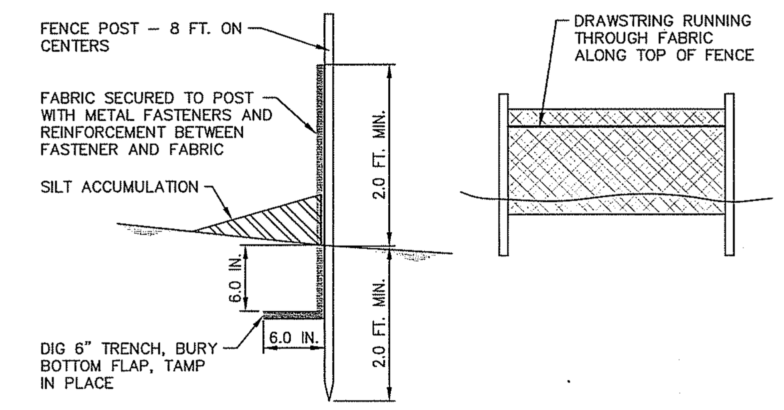

SILT FENCE SEDIMENT BARRIER
(NO SCALE)

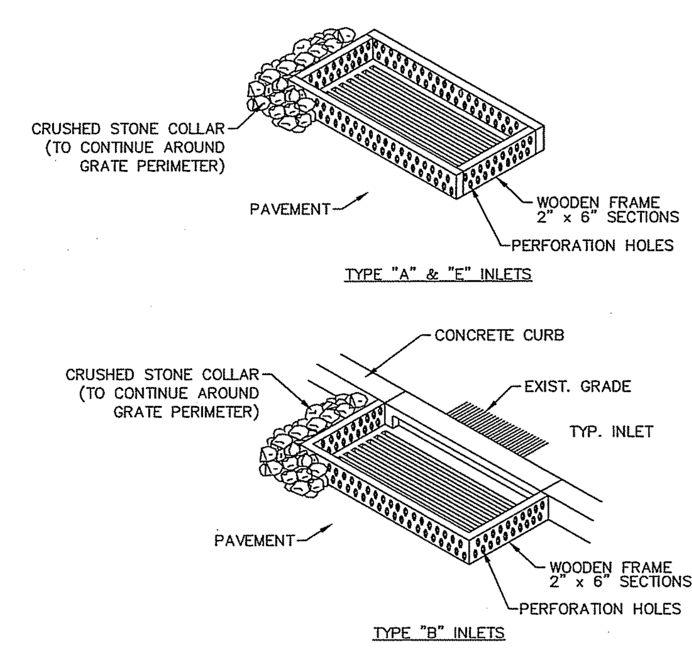

INLET SEDIMENT FILTER
(NO SCALE)

HORIZONTAL SCALE
40 20 0 40 80
(IN FEET)
1 inch = 40 ft.

ONLY COPIES FROM THE ORIGINAL MAP OF THIS PLAT, CLEARLY MARKED WITH THE APPROPRIATE PROFESSIONAL'S EMBOSSED SEAL, SHALL BE CONSIDERED TO BE VALID COPIES.

THIS PLAT HAS BEEN PREPARED WITHOUT THE BENEFIT OF A TITLE REPORT. THIS CORPORATION AND/OR ITS EMPLOYEES ARE NOT LIABLE FOR ERRORS OR OMISSIONS RESULTING FROM THIS CONDITION.

THIS PLAT DOES NOT SHOW OR INTEND TO SHOW ANY NONRECORDED EASEMENTS OR RIGHTS-OF-WAY.

NO FRESHWATER WETLANDS, AS DEFINED BY THE NEW JERSEY FRESHWATER WETLANDS PROTECTION ACT (N.J.S.A. 13:9B-1), ARE INTENDED TO BE SHOWN OR DELINEATED AS PART OF THIS SURVEY.

THE ORIGINAL OF THIS DRAWING IS THE PROPERTY OF FRALINGER ENGINEERING PA.

STEPHEN J. NARDELLI, P.E., P.P., C.M.E.
PROFESSIONAL ENGINEER N.J. LIC. NO. 24GE03712700
PROFESSIONAL PLANNER N.J. LIC. NO. 33LI00572400
snardelli@fralinger.com
DATE

NO.	DATE	REVISION	BY

Fralinger Engineering
629 Shiloh Pike
Bridgeton, NJ 08302
Phone: (856) 451-2990
Fax: (856) 455-9702
www.fralinger.com
CONSULTING ENGINEERS • PLANNERS • LAND SURVEYORS • ENVIRONMENTAL SERVICES

GRADING AND SOIL EROSION AND SEDIMENT CONTROL PLAN
PREPARED FOR
HENDRICKS HOUSE GROUP

MUNICIPALITY:	CITY OF MILLVILLE	PROJECT #:	29548.01
COUNTY:	CUMBERLAND COUNTY	CADD FILE #:	29548.01 SITE PLAN.DWG
STATE:	NEW JERSEY	DATE:	6-1-20
SCALE:	1" = 40'	DRAWN BY:	JWB
		CHECKED BY:	

SP-4